RLC Engineering, LLC
267 Whitten Road
Hallowell, ME 04347
207.621.1077 (p)
207.621.1177 (f)
www.rlc-eng.com

Eolian Renewable Energy, LLC
155 Fleet Street
Portsmouth, NH 03801
603.570.4842 (p)
603.457.0065 (f)
www.eolian-energy.com

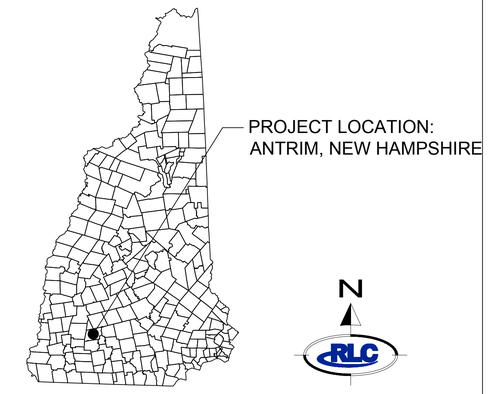

STATE OF NEW HAMPSHIRE
NTS

ANTRIM WIND PROJECT

RE-ISSUED FOR PERMIT
TUTTLE HILL AND WILLARD MOUNTAIN
ANTRIM, NEW HAMPSHIRE

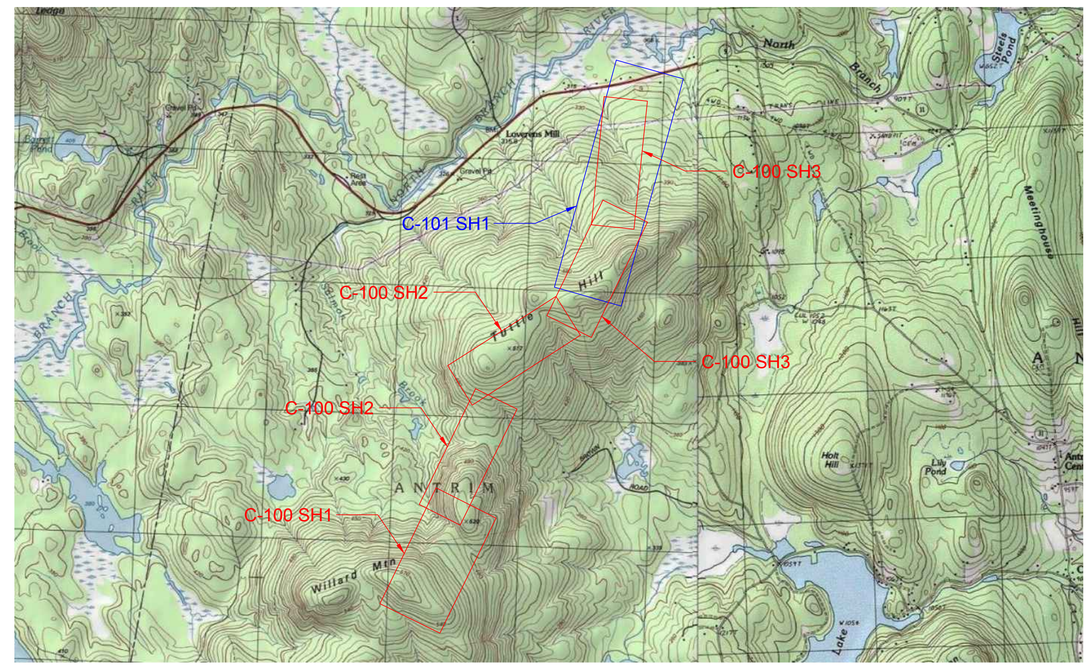

VICINITY MAP
NTS

N

June 15th, 2015
RLC Project Number: 22013

REVISION: C

RLC ENGINEERING

RLC Engineering, LLC
267 Whitten Road
Hallowell, ME 04347
207.621.1077 (p)
207.621.1177 (f)
www.rlc-eng.com

ANTRIM WIND PROJECT

TUTTLE HILL AND WILLARD MOUNTAIN
ANTRIM, NEW HAMPSHIRE

-DRAWING INDEX-

DWG NO	REV.	DESCRIPTION
C-100 SH. 1	F	34.5KV UNDERGROUND COLLECTOR SYSTEM
SH. 2	D	34.5KV UNDERGROUND COLLECTOR SYSTEM
SH. 3	D	34.5KV UNDERGROUND COLLECTOR SYSTEM
C-101 SH. 1	D	34.5KV OVERHEAD COLLECTOR SYSTEM
S-200	E	INTERCONNECTION COLLECTOR SUBSTATION GENERAL ARRANGEMENT PLAN
S-201 SH.1	D	SUBSTATION ELEVATIONS A & B
S-201 SH.2	D	SUBSTATION ELEVATIONS C & D
S-202	D	STRUCTURE DETAILS - 34.5KV SINGLE CIRCUIT
S-203	C	34.5KV UNDERGROUND COLLECTOR TRENCH DETAILS
E-100	H	KEY ONE LINE DIAGRAM

REVISION: C

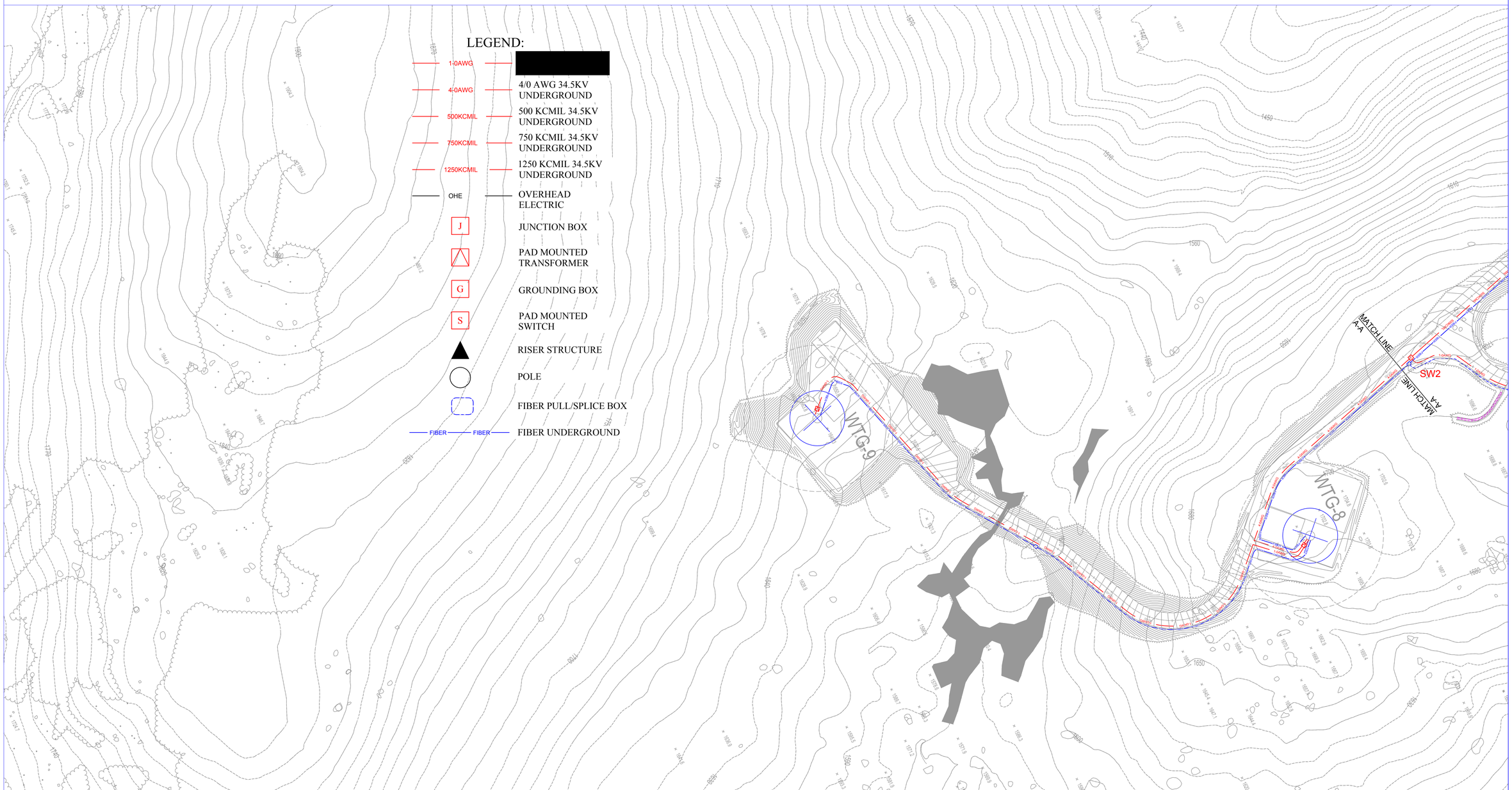

PRELIMINARY
NOT FOR CONSTRUCTION

GRAPHIC SCALE
(IN FEET)
1 inch = 100 ft.

REVISION	DWG BY	DESCRIPTION	DATE
A	ARH	FOR PERMIT APPLICATION ONLY - NOT FOR CONSTRUCTION	5/20/2011
B	ARH	RE-ISSUED FOR PERMIT APPLICATION ONLY - NOT FOR CONSTRUCTION	1/18/2012
C	NRM	ADDED 10 KVA TRANSFORMER LOCATION AT TURBINE 10 AND HARRIER VAS	8/15/2012
D	NRM	REMOVED TURBINE 10 AND ALL CABLE FEEDS TO TURBINE 10	4/24/2013
E	NRM	UPDATED CIVIL SITE LAYOUT	2/2/2015
F	KAC	RE-ISSUED FOR PERMIT APPLICATION ONLY - NOT FOR CONSTRUCTION	6/15/2015

DESIGNED: ARH
DATE: 12/23/2011
DRAWN: ARH
REVISION: F
SCALE: 1" = 100'
CHECKED: CJL
APPROVED: DPE

PROJECT: EOLIAN REWABLE ENERGY
ANTRIM WINDPARK
ANTRIM, NEW HAMPSHIRE

DRAWING DESCRIPTION: 34.5kV UNDERGROUND COLLECTOR SYSTEM

SEAL: STATE OF NEW HAMPSHIRE 06-15-15 DAVID P. ESTEY No. 10409 PROFESSIONAL ENGINEER

ENGINEER: RLC ENGINEERING
267 Whitten Road
Hallowell, ME 04347
Phone 207.621.1077
Fax 207.621.1177

PROJECT #: 22013

PHASE: PERMIT

SHEET #: C-100 SH1

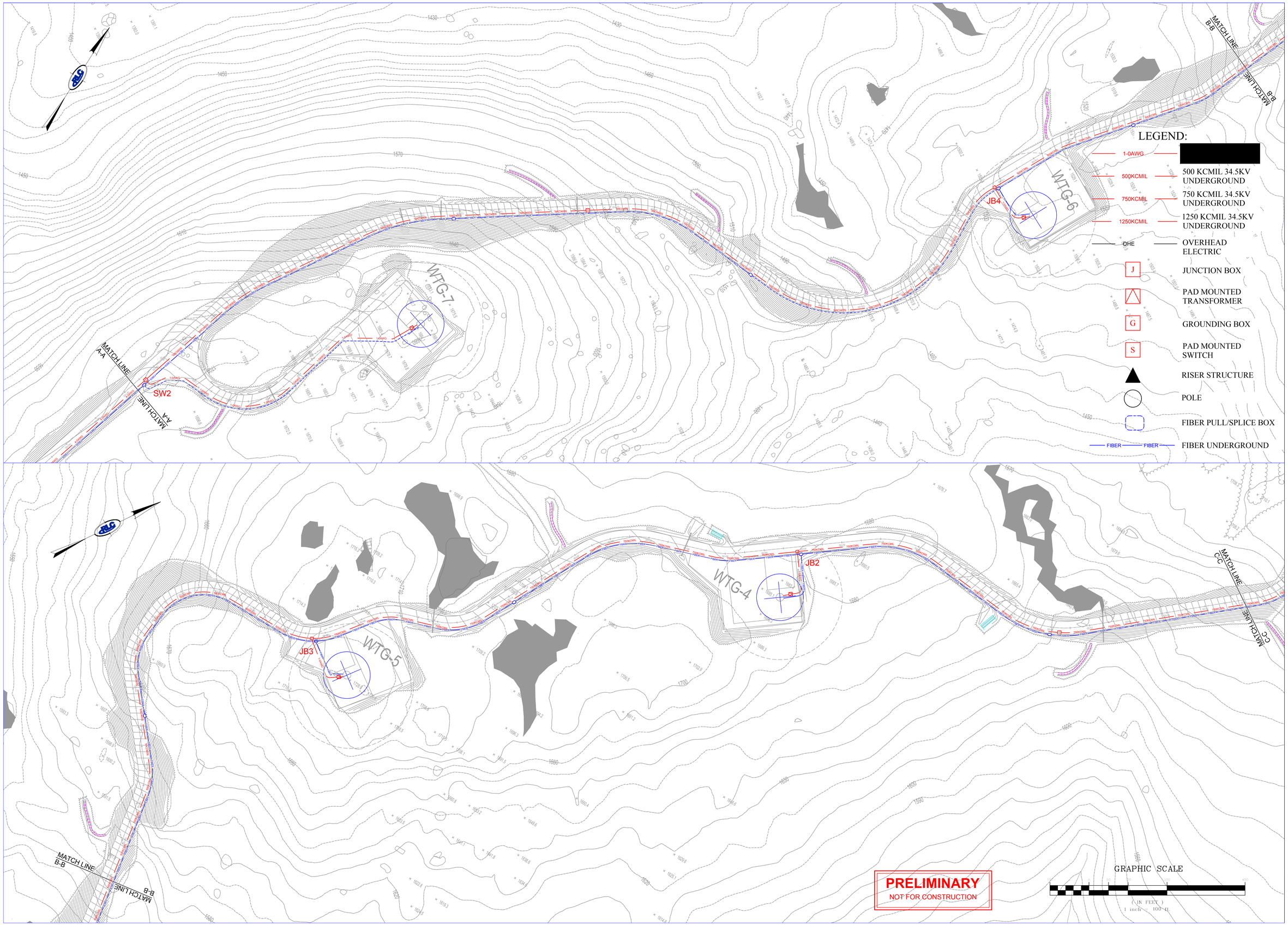

REVISION	DWG BY	DESCRIPTION	DATE
A	ARH	FOR PERMIT APPLICATION ONLY - NOT FOR CONSTRUCTION	5/20/2011
B	ARH	RE-ISSUED FOR PERMIT APPLICATION ONLY - NOT FOR CONSTRUCTION	1/18/2012
C	NBM	UPDATED CIVIL SITE LAYOUT	2/2/2015
D	KAC	RE-ISSUED FOR PERMIT APPLICATION ONLY - NOT FOR CONSTRUCTION	6/15/2015

DESIGNED: ARH
DRAWN: ARH
DATE: 12/23/2011
REVISION: D
SCALE: 1" = 100'
CHECKED: CJL
APPROVED: DPE

PROJECT: EOLIAN REWABLE ENERGY ANTRIM WINDPARK ANTRIM, NEW HAMPSHIRE

DRAWING DESCRIPTION: 34.5kV UNDERGROUND COLLECTOR SYSTEM

SEAL: STATE OF NEW HAMPSHIRE 06-15-15 DAVID P. ESTEY No. 10409 PROFESSIONAL ENGINEER

REV D

PROJECT #: 22013

ENGINEER: RLC ENGINEERING

267 Whitten Road
Hallowell, ME 04347
Phone 207.621.1077
Fax 207.621.1177

PHASE: PERMIT

SHEET #: C-100 SH2

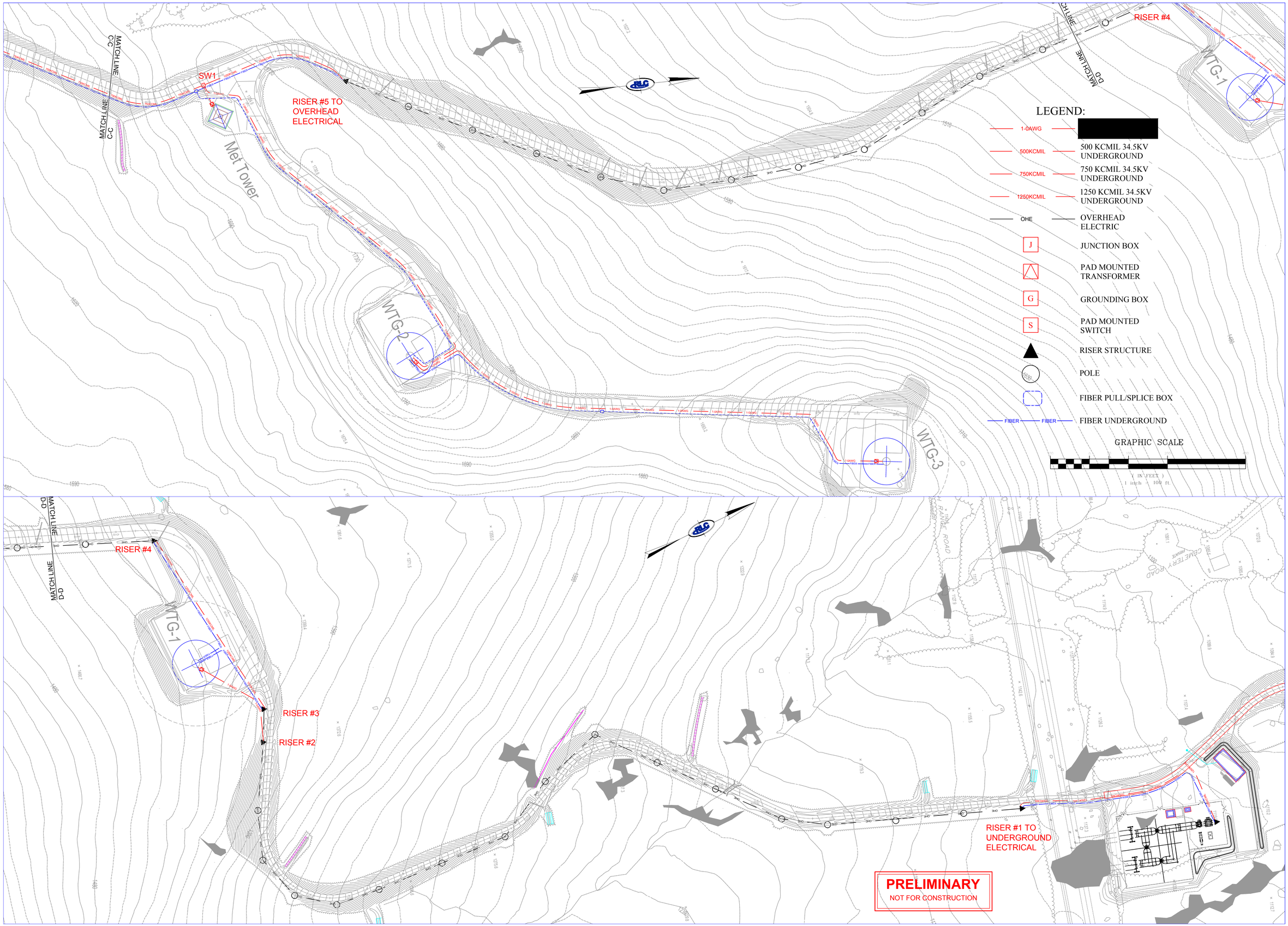

REVISION	DWG BY	DESCRIPTION	DATE
A	ARH	FOR PERMIT APPLICATION ONLY - NOT FOR CONSTRUCTION	12/23/2011
B	ARH	RE-ISSUED FOR PERMIT APPLICATION ONLY - NOT FOR CONSTRUCTION	1/18/2012
C	NRM	UPDATED CIVIL SITE LAYOUT	2/2/2015
D	KAC	RE-ISSUED FOR PERMIT APPLICATION ONLY - NOT FOR CONSTRUCTION	6/15/2015

DESIGNED ARH
DRAWN ARH
DATE 12/23/2011
REVISION D
SCALE 1" = 100'
CHECKED CJL
APPROVED DPE

PROJECT
EOLIAN REWABLE ENERGY
ANTRIM WINDPARK
ANTRIM, NEW HAMPSHIRE

DRAWING DESCRIPTION
34.5kV UNDERGROUND COLLECTOR SYSTEM

SEAL
STATE OF NEW HAMPSHIRE
06-15-15
DAVID P. ESTEY
No. 10409
PROFESSIONAL ENGINEER

PROJECT #
22013

ENGINEER
RLC ENGINEERING
267 Whitten Road
Hallowell, ME 04347
Phone 207.621.1077
Fax 207.621.1177

PHASE
PERMIT

SHEET #
C-100 SH3

PLS-CADD Drawing

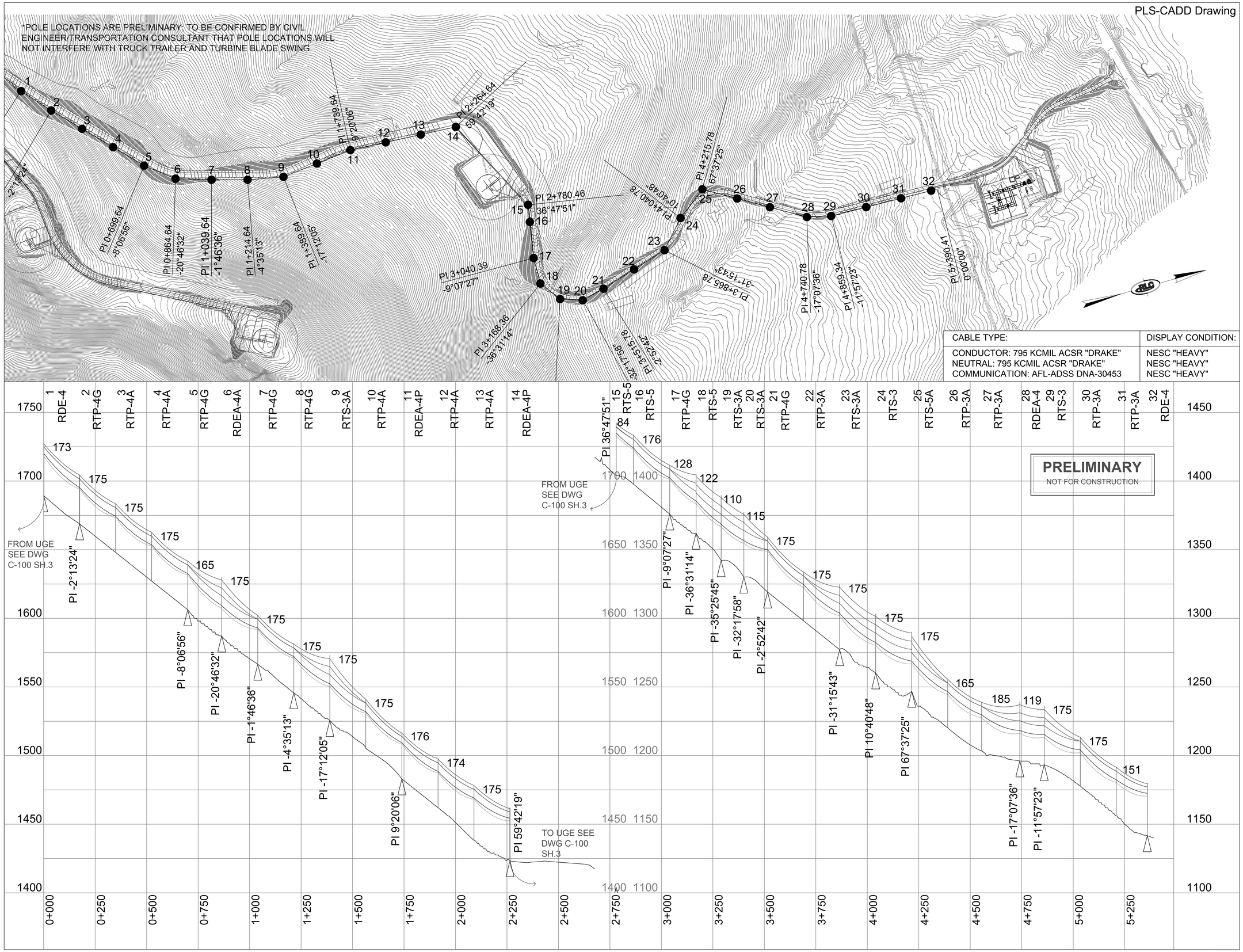

CABLE TYPE:	DISPLAY CONDITION:
CONDUCTOR: 795 KCMIL ACSR "DRAKE"	NESC "HEAVY"
NEUTRAL: 795 KCMIL ACSR "DRAKE"	NESC "HEAVY"
COMMUNICATION: AFL-ADSS DNA-30453	NESC "HEAVY"

REVISION	DWG BY	DESCRIPTION	DATE
A	ARH	FOR PERMIT APPLICATION ONLY - NOT FOR CONSTRUCTION	12/29/2011
B	ARH	RE-ISSUED FOR PERMIT APPLICATION ONLY - NOT FOR CONSTRUCTION	01/18/2012
C	NRM	UPDATED CIVIL SITE LAYOUT	02/02/2015
D	KAC	RE-ISSUED FOR PERMIT APPLICATION ONLY - NOT FOR CONSTRUCTION	06/12/2015

DESIGNED: ARH
DRAWN: ARH
DATE: 12/28/2011
REVISION: D
SCALE: 1":200'H 1":30'V
CHECKED: NSH
APPROVED: NSH

PROJECT: EOLIAN RENEWABLE ENERGY, LLC
ANTRIM WIND PROJECT
ANTRIM, NH

DRAWING DESCRIPTION: 34.5kV OVERHEAD COLLECTOR SYSTEM

SEAL: STATE OF NEW HAMPSHIRE, AUSTIN R. HARRELL, No. 13689, LICENSED PROFESSIONAL ENGINEER, 06-15-15, REV. D

RLC ENGINEERING
267 Whitten Road
Hallowell, ME 04347
Phone 207.621.1077
Fax 207.621.1177

PROJECT #: 22013

PHASE: PERMIT

SHEET #: C-101 SH.1

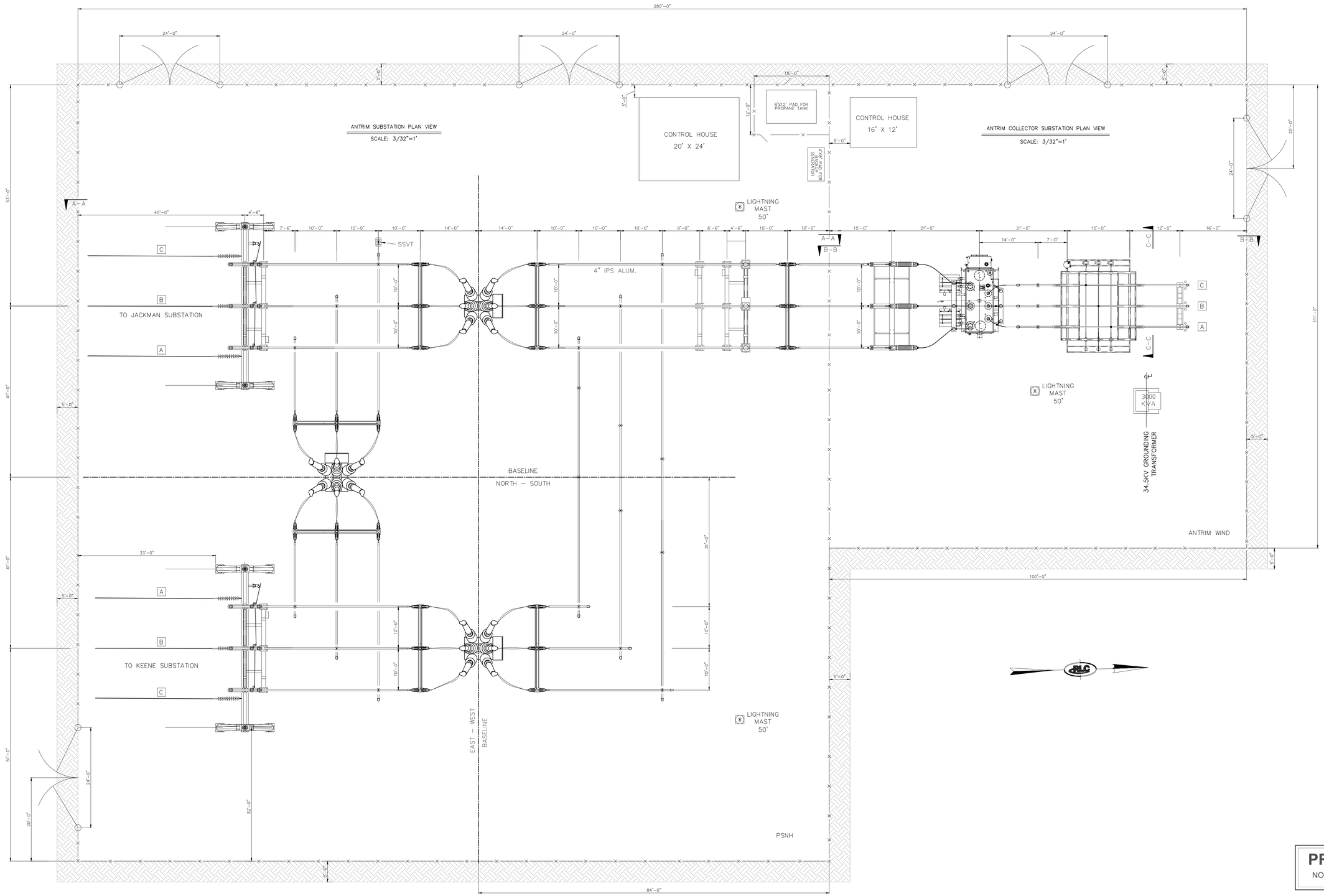

PRELIMINARY
NOT FOR CONSTRUCTION

STATE OF NEW HAMPSHIRE
06-15-15
DAVID P. ESTEY
No. 10409
PROFESSIONAL ENGINEER

NO.	REVISION/ISSUE	DATE	DRWN	CHKD	APRVD
E	RE-ISSUED FOR PERMIT APPLICATION ONLY-NOT FOR CONSTRUCTION	6/15/15	KAC	NRM	DPE
D	RE-ISSUED FOR PERMIT APPLICATION ONLY-NOT FOR CONSTRUCTION	1/18/12	NRM	DPE	DPE
C	ISSUED FOR PERMIT APPLICATION ONLY - NOT FOR CONSTRUCTION	12/23/11	NRM	DPE	DPE
B	REVISED PER SITE PLAN	11/17/11	NRM	DPE	DPE
A	CONCEPTUAL DESIGN	9/12/11	NRM	DPE	DPE

REV'D

RLC ENGINEERING
267 Whitten Road
Hallowell, ME 04347
Phone 207-621-1077
Fax # 207-621-1177

ANTRIM WIND PROJECT

EOLIAN RENEWABLE ENERGY
ANTRIM, NEW HAMPSHIRE

SCALE: 3/32" = 1'-0" SHEET: 1 OF 1

INTERCONNECTION COLLECTOR SUBSTATION GENERAL ARRANGEMENT PLAN

PROJECT #:	22013
DRAWING #:	S-200
ENGIN'D BY:	DPE
DRAWN BY:	NRM
DATE:	9/12/11

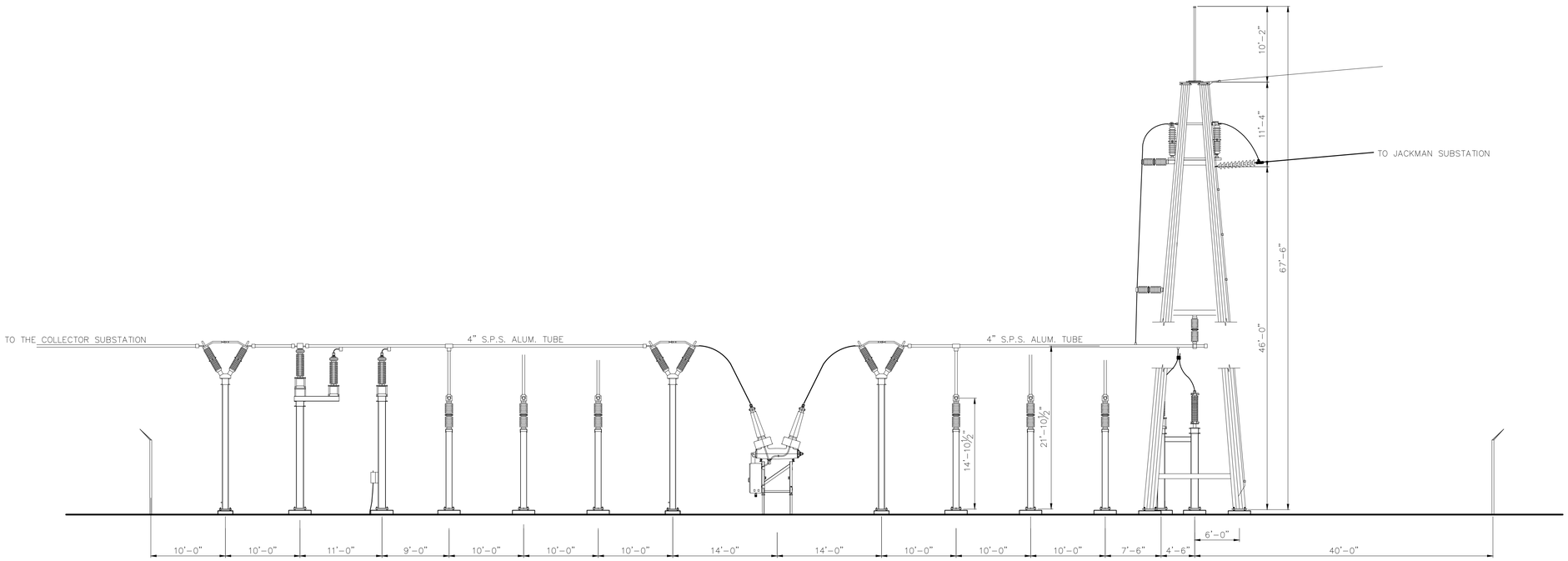

ELEVATION A-A

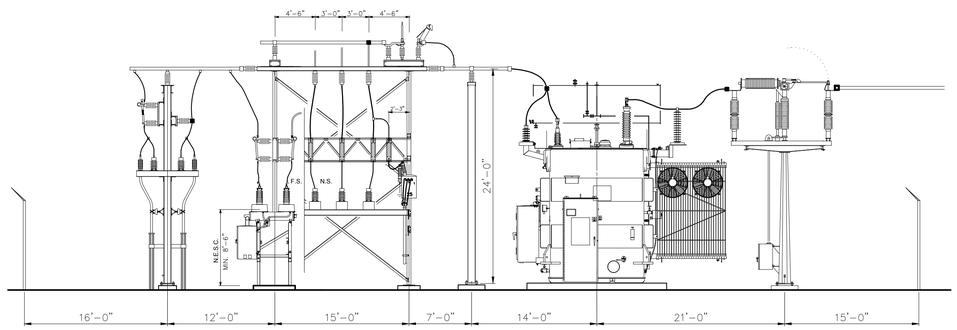

ELEVATION B-B

PRELIMINARY
NOT FOR CONSTRUCTION

STATE OF NEW HAMPSHIRE
06-15-15
DAVID P. ESTEY
No.10409
PROFESSIONAL ENGINEER

REV 0

NO.	REVISION/ISSUE	DATE	DRWN	CHKD	APRVD
D	RE-ISSUED FOR PERMIT APPLICATION ONLY - NOT FOR CONSTRUCTION	6/15/15	KAC	NRM	DPE
C	RE-ISSUED FOR PERMIT APPLICATION ONLY - NOT FOR CONSTRUCTION	1/18/11	NRM	DPE	DPE
B	ISSUED FOR PERMIT APPLICATION ONLY - NOT FOR CONSTRUCTION	12/23/11	NRM	DPE	DPE
A	CONCEPTUAL DESIGN	11/23/11	NRM	DPE	DPE

RLC ENGINEERING
267 Whitten Road
Hallowell, ME 04347
Phone 207-621-1077
Fax # 207-621-1177

ANTRIM WIND PROJECT

EOLIAN RENEWABLE ENERGY
ANTRIM, NEW HAMPSHIRE

SCALE: 1/8" = 1' SHEET: 1 OF 2

ANTRIM WIND COLLECTOR SUBSTATION SECTION AND ELEVATION VIEWS

PROJECT #:	22013
DRAWING #:	S-201
ENGIN'D BY:	DPE
DRAWN BY:	NRM
DATE:	11/22/11

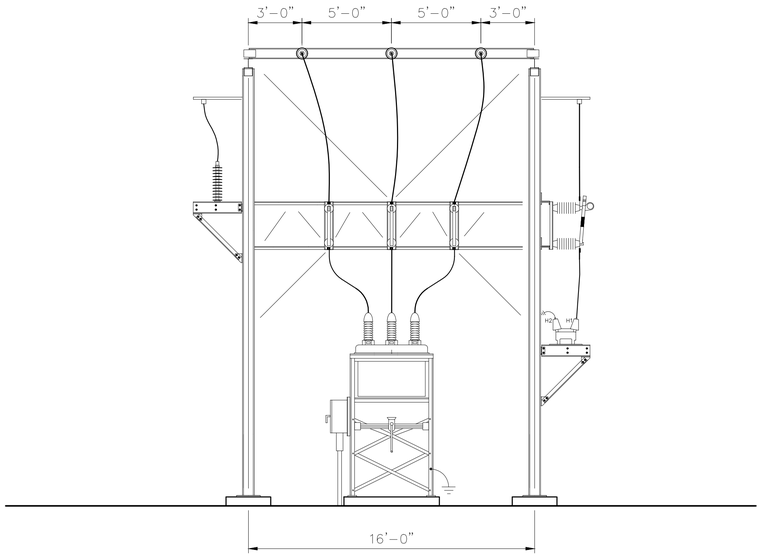

ELEVATION C-C

PRELIMINARY
NOT FOR CONSTRUCTION

STATE OF NEW HAMPSHIRE
06-15-15
DAVID P. ESTEY
No.10409
PROFESSIONAL ENGINEER

NO.	REVISION/ISSUE	DATE	DRWN	CHKD	APRVD
D	RE-ISSUED FOR PERMIT APPLICATION ONLY - NOT FOR CONSTRUCTION	6/15/15	KAC	NRM	DPE
C	RE-ISSUED FOR PERMIT APPLICATION ONLY - NOT FOR CONSTRUCTION	1/18/12	NRM	DPE	DPE
B	ISSUED FOR PERMIT APPLICATION ONLY - NOT FOR CONSTRUCTION	12/23/11	NRM	DPE	DPE
A	CONCEPTUAL DESIGN	11/23/11	NRM	DPE	DPE

RLC ENGINEERING
267 Whitten Road
Hallowell, ME 04347
Phone 207-621-1077
Fax # 207-621-1177

ANTRIM WIND PROJECT

EOLIAN RENEWABLE ENERGY
ANTRIM, NEW HAMPSHIRE

SCALE: 1/4" = 1'
SHEET: 2 OF 2

ANTRIM WIND COLLECTOR SUBSTATION SECTION AND ELEVATION VIEWS

PROJECT #: 22013
DRAWING #: S-201
ENGIN'D BY: DPE
DRAWN BY: NRM
DATE: 11/22/11

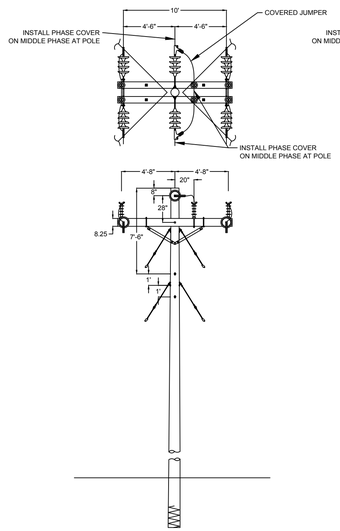

RDE-4

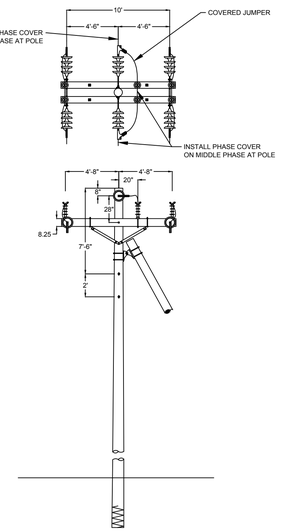

RDEA-4P

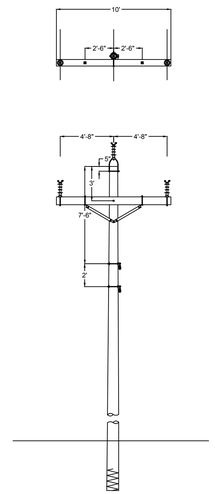

RTP-3A

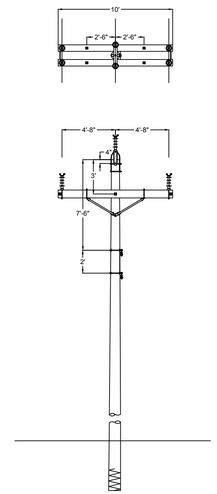

RTP-4A

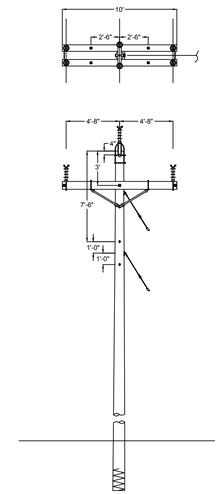

RTP-4G

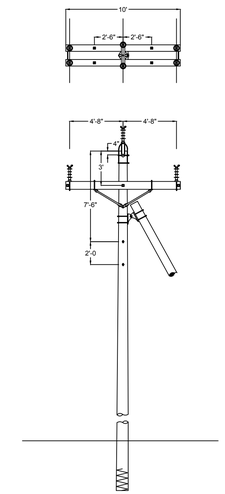

RTP-4P

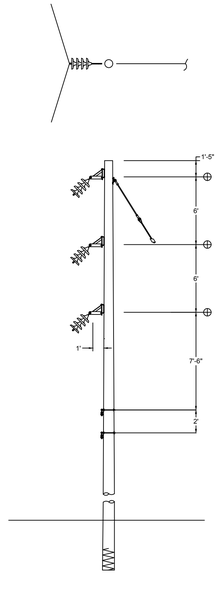

RTS-3
(6° - 12°)

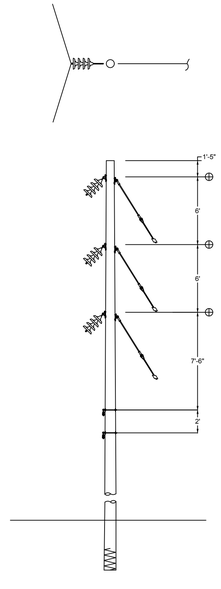

RTS-3A
(12° - 20°)

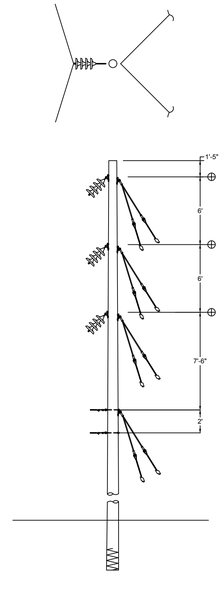

RTS-4
(20° - 45°)

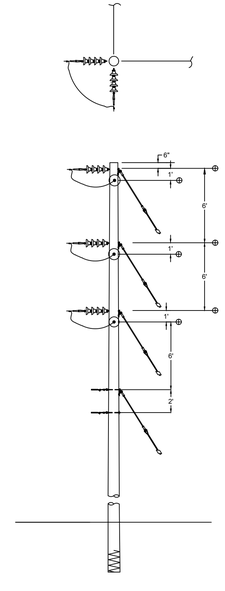

RTS-5
(MAX 90°)

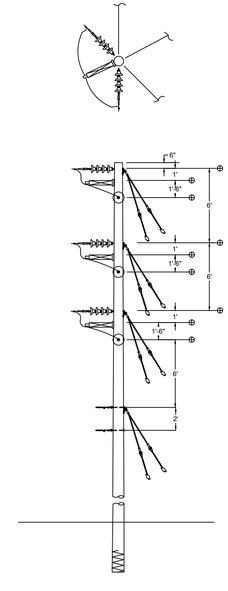

RTS-5A
(MIN 40°)

PRELIMINARY
NOT FOR CONSTRUCTION

STATE OF NEW HAMPSHIRE
06-15-15
DAVID P. ESTEY
No.10409
PROFESSIONAL ENGINEER

NO.	REVISION/ISSUE	DATE	DRWN	CHKD	APRVD
D	RE-ISSUED FOR PERMIT APPLICATION ONLY - NOT FOR CONSTRUCTION	6/15/2015	KAC	NRM	ARH
C	UPDATED FOR AVIAN PROTECTION - NOT FOR CONSTRUCTION	2/02/15	NRM	ARH	DPE
B	RE-ISSUED FOR PERMIT APPLICATION ONLY - NOT FOR CONSTRUCTION	1/18/12	NRM	ARH	DPE
A	FOR PERMIT APPLICATION ONLY - NOT FOR CONSTRUCTION	12/29/11	NRM	ARH	DPE

RLC ENGINEERING
267 Whitten Road
Hallowell, ME 04347
Phone 207-621-1077
Fax 207-621-1177

ANTRIM WIND PROJECT
EOLIAN RENEWABLE ENERGY, LLC
ANTRIM, NEW HAMPSHIRE

SCALE: NTS
SHEET: 1 OF 1

STRUCTURE DETAILS - 34.5KV SINGLE CIRCUIT

PROJECT #: 22013
DRAWING #: S-202
ENGIN'D BY: DPE
DRAWN BY: NRM
DATE: 12/20/11

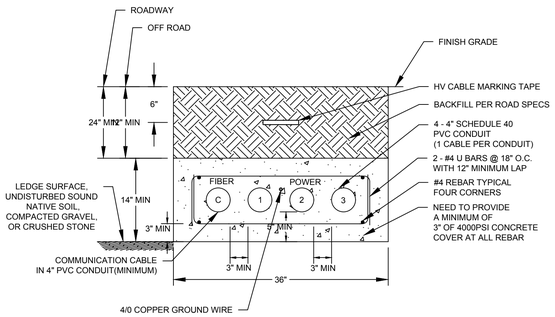

SINGLE CABLE/CONDUIT
1 X 4 CONFIGURATION

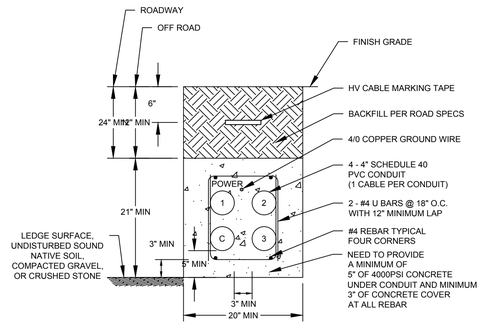

SINGLE CABLE/CONDUIT
2 X 2 CONFIGURATION

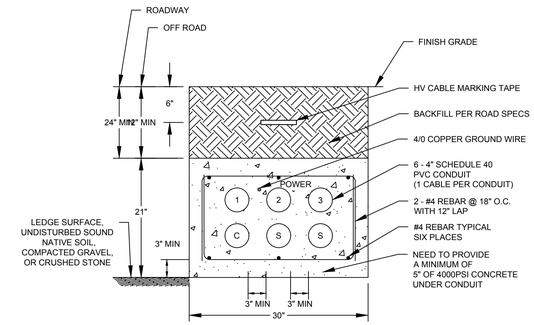

SINGLE CABLE/CONDUIT
2 X 3 CONFIGURATION

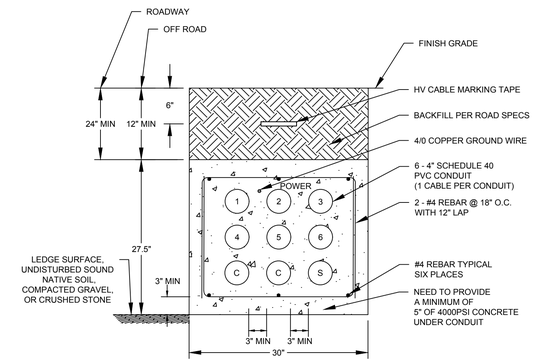

SINGLE CABLE/CONDUIT
3 X 3 CONFIGURATION

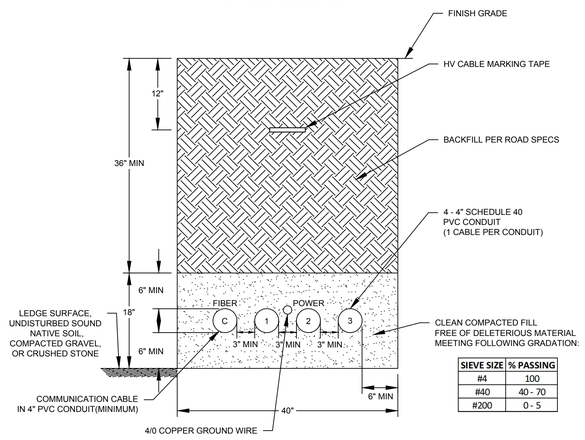

SIEVE SIZE	% PASSING
#4	100
#40	40 - 70
#200	0 - 5

SINGLE CABLE/CONDUIT
1 X 4 CONFIGURATION

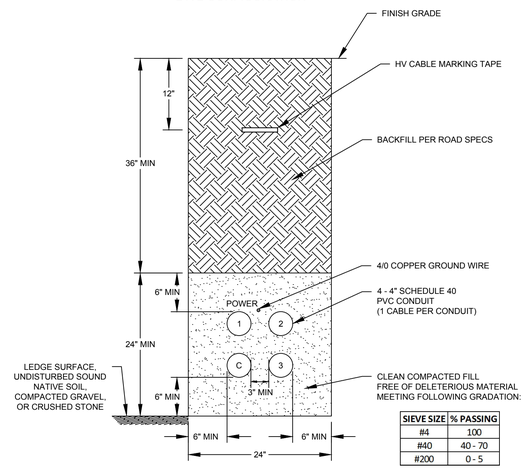

SIEVE SIZE	% PASSING
#4	100
#40	40 - 70
#200	0 - 5

SINGLE CABLE/CONDUIT
2 X 2 CONFIGURATION

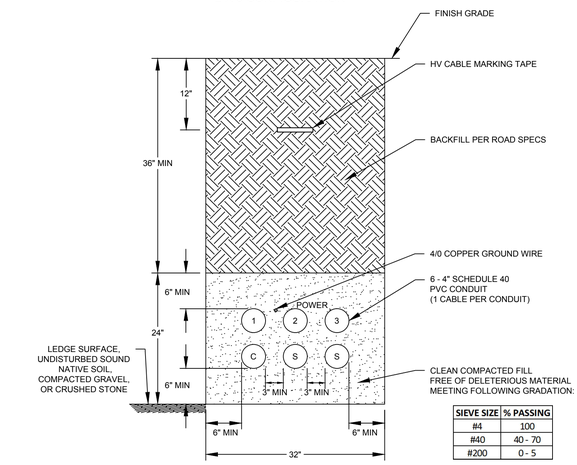

SIEVE SIZE	% PASSING
#4	100
#40	40 - 70
#200	0 - 5

SINGLE CABLE/CONDUIT
2 X 3 CONFIGURATION

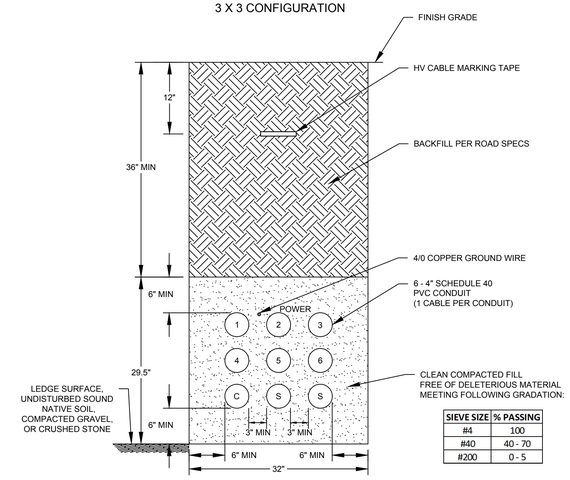

SIEVE SIZE	% PASSING
#4	100
#40	40 - 70
#200	0 - 5

SINGLE CABLE/CONDUIT
3 X 3 CONFIGURATION

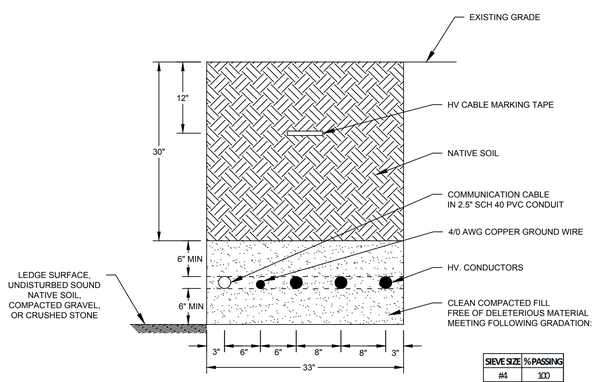

SIEVE SIZE	% PASSING
#4	100
#40	40 - 70
#200	0 - 5

DIRECT BURIAL
TRENCH DETAIL
SINGLE CIRCUIT

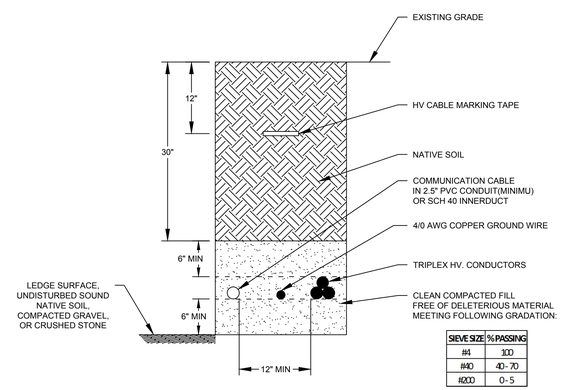

SIEVE SIZE	% PASSING
#4	100
#40	40 - 70
#200	0 - 5

DIRECT BURIAL TRENCH DETAIL
SINGLE CIRCUIT
W/ TRIPLEX CONDUCTOR

PRELIMINARY
NOT FOR CONSTRUCTION

STATE OF NEW HAMPSHIRE
06-15-15
DAVID P. ESTEY
No. 10409
PROFESSIONAL ENGINEER
REV 0

NO.	REVISION/ISSUE	DATE	DRWN	CHKD	APRVD
C	RE-ISSUED FOR PERMIT APPLICATION ONLY - NOT FOR CONSTRUCTION	6/15/2015	KAC	NRM	DPE
B	RE-ISSUED FOR PERMIT APPLICATION ONLY - NOT FOR CONSTRUCTION	1/18/12	NRM	ARH	DPE
A	ISSUED FOR PERMIT APPLICATION ONLY - NOT FOR CONSTRUCTION	12/29/11	NRM	ARH	DPE

RLC ENGINEERING
267 Whitten Road
Hallowell, ME 04347
Phone 207-621-1077
Fax 207-621-1177

ANTRIM WIND PROJECT
EOLIAN RENEWABLE ENERGY, LLC
ANTRIM, NEW HAMPSHIRE

SCALE: NTS
SHEET: 1 OF 1

34.5KV UNDERGROUND COLLECTOR TRENCH DETAILS

PROJECT #: 22013
DRAWING #: S-203
ENGIN'D BY: DPE
DRAWN BY: NRM
DATE: 12/20/11

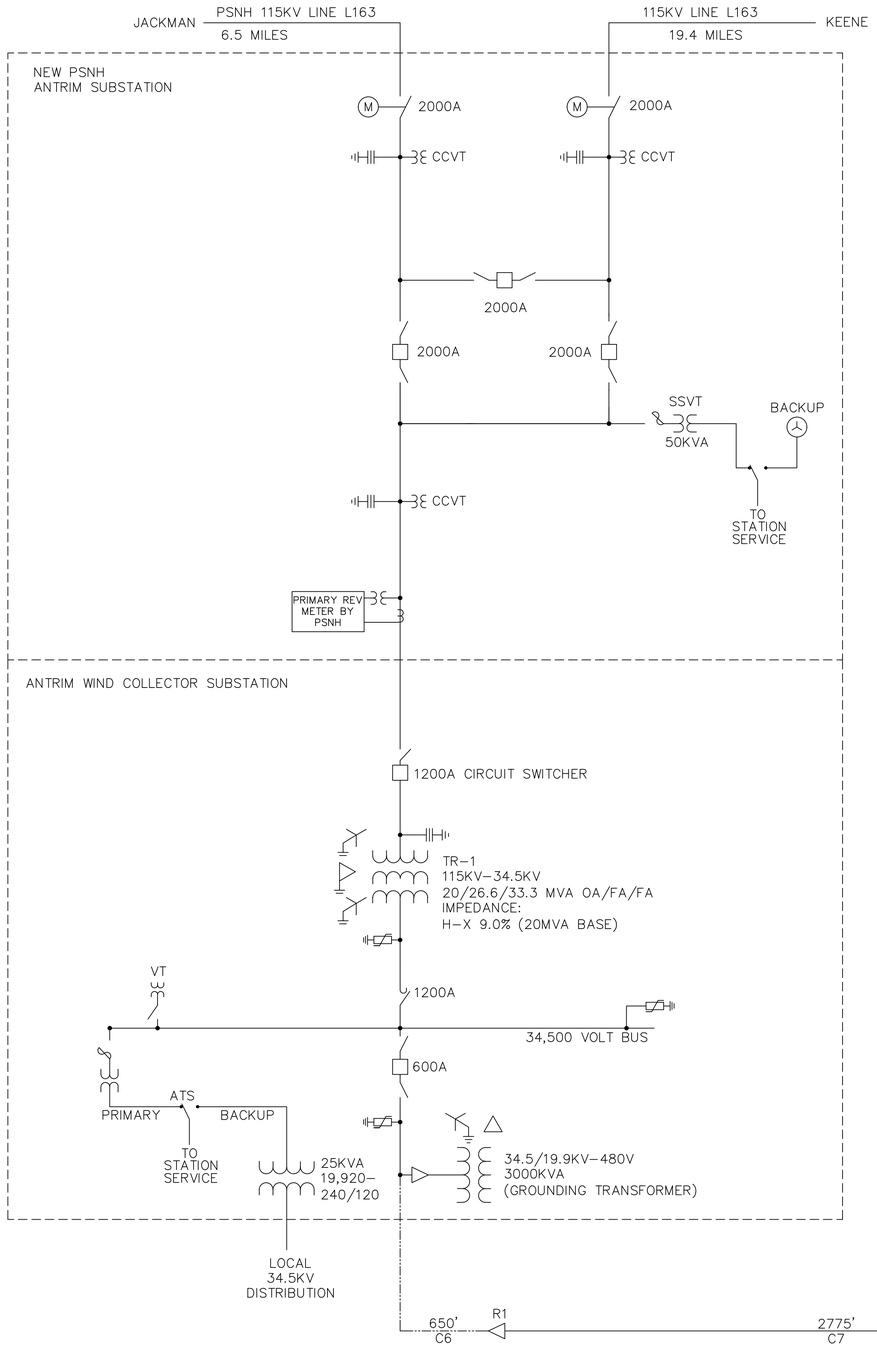

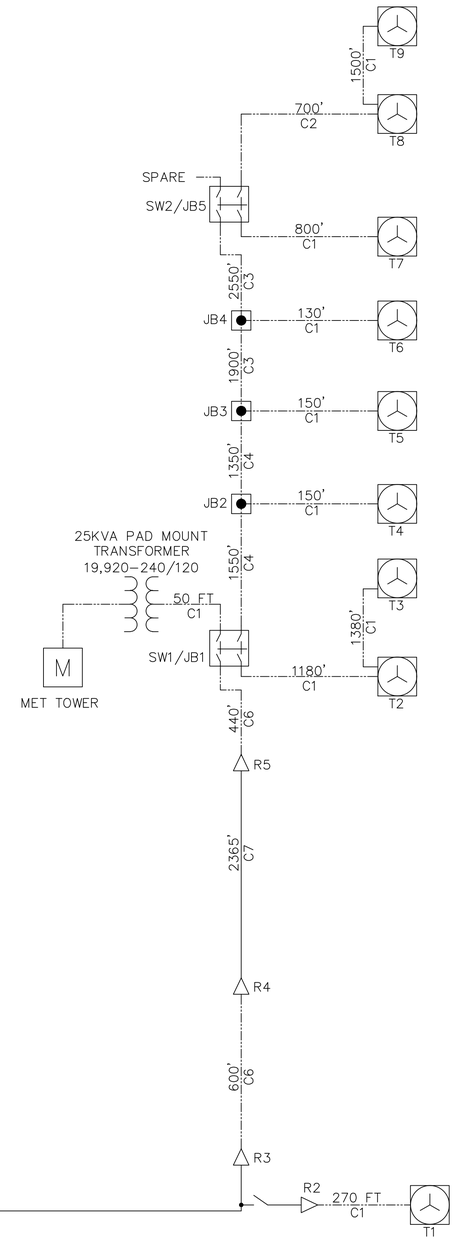

CABLE ID	CABLE DESCRIPTION	Z1 IMPEDANCE	Z0 IMPEDANCE	CAPACITANCE	Xc IMPEDANCE	MAX AMPS
C1	35KV 1/0 AWG AL WITH $\frac{1}{3}$ NEUTRAL CONCENTRIC SHIELD	0.2190+j0.0970 OHM/1000'	0.7340+j0.034 OHM/1000'	31.2 pf/ft	85.1 MOHM-FT	168
C2	35KV 4/0 AWG AL WITH $\frac{1}{3}$ NEUTRAL CONCENTRIC SHIELD	0.1190+j0.0850 OHM/1000'	0.3960+j0.0270 OHM/1000'	38.6 pf/ft	68.8 MOHM-FT	247
C3	35KV 500 KCMIL AL WITH $\frac{1}{3}$ NEUTRAL CONCENTRIC SHIELD	0.0640+j0.0700 OHM/1000'	0.1710+j0.0240 OHM/1000'	50.2 pf/ft	52.9 MOHM-FT	392
C4	35KV 750 KCMIL AL WITH $\frac{1}{6}$ NEUTRAL CONCENTRIC SHIELD	0.0550+j0.0580 OHM/1000'	0.1160+j0.0210 OHM/1000'	57.7 pf/ft	46 MOHM-FT	476
C5	35KV 1000 KCMIL AL WITH $\frac{1}{3}$ NEUTRAL CONCENTRIC SHIELD	0.0460+j0.0520 OHM/1000'	0.0880+j0.0210 OHM/1000'	64.2 pf/ft	41.3 MOHM-FT	530
C6	35KV 1250 KCMIL AL WITH $\frac{1}{3}$ NEUTRAL CONCENTRIC SHIELD	0.043+j0.044 OHM/1000'	.07007+j0.0190 OHM/1000'	74.6 pf/ft	35.6 MOHM-FT	575
C7	35KV OH 795 KCMIL ACSR - FLAT CONSTRUCTION	0.1391+j0.6084 OHM/MILE	0.3245+j1.5913 OHM/MILE	N/A	.141035 MOHM-FT	730

NOTE: ALL ABOVE VALUES ARE ON A PER PHASE BASIS.

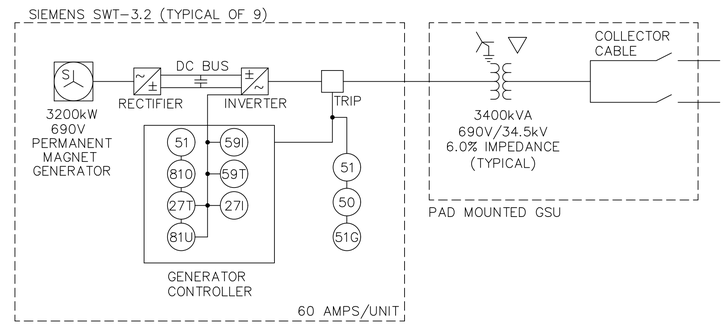

PRELIMINARY
NOT FOR CONSTRUCTION

NOTE: CABLE DISTANCES ARE ESTIMATES AND ARE SUBJECT TO CHANGE.

STATE OF NEW HAMPSHIRE
06-15-15
DAVID P. ESTEY
No. 12469
PROFESSIONAL ENGINEER
REV D

NO.	REVISION/ISSUE	DATE	DRWN	CHKD	APRVD
H	RE-ISSUED FOR PERMIT APPLICATION ONLY-NOT FOR CONSTRUCTION	6/15/2015	KAC	NRM	DPE
G	UPDATED FROM ACCIONA TO SIEMENS TURBINES	8/1/14	NRM	DPE	DPE
F	REMOVED TURBINE 10	4/24/13	NRM	DPE	DPE
E	RE-ISSUED FOR PERMIT APPLICATION ONLY-NOT FOR CONSTRUCTION	1/18/12	NRM	DPE	DPE
D	ISSUED FOR PERMIT APPLICATION ONLY-NOT FOR CONSTRUCTION	12/29/11	ARH	DPE	DPE
C	ADDED CIRCUIT SWITCHER & PADMOUNTED SWITCHGEAR	11/29/11	NRM	DPE	DPE

RLC ENGINEERING
267 Whitten Road
Hallowell, ME 04347
Phone 207-621-1077
Fax # 207-621-1177

ANTRIM WIND PROJECT

EOLIAN RENEWABLE ENERGY
ANTRIM, NEW HAMPSHIRE

SCALE: NTS
SHEET: 1 OF 1

KEY ONE LINE DIAGRAM CONCEPTUAL DESIGN FOR 28.8 MW FACILITY

PROJECT #: 22013
DRAWING #: E-100 SH1
ENGIN'D BY: DPE
DRAWN BY: NRM
DATE: 3/17/11