Appendix R

Engineering Drawings

■

MERRIMACK VALLEY RELIABILITY PROJECT
LINE 3124 345 kV TRANSMISSION

nationalgrid

EVERSOURCE ENERGY

BLACK & VEATCH CORPORATION

TRC

DRAWING NO. 400298-S3124-SH.1

MERRIMACK VALLEY RELIABILITY PROJECT

LINE 3124 345 kV TRANSMISSION

KEY SHEET - NEW HAMPSHIRE PROJECT AREA

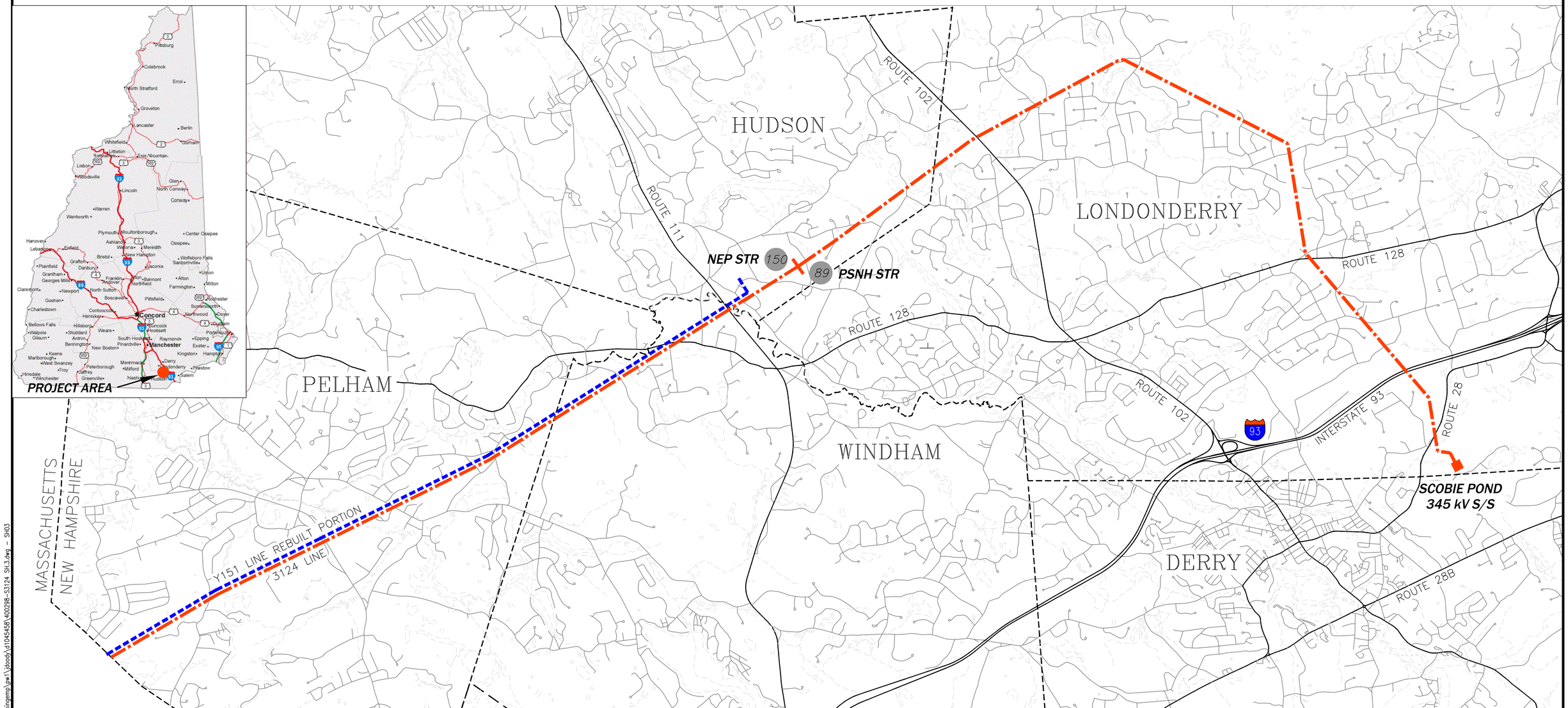

LEGEND:

- DENOTES 3124 TRANSMISSION LINE
- DENOTES Y151 TRANSMISSION LINE
- 89 DENOTES PROPOSED STRUCTURE NUMBERS

3000' 1500' 0' 3000' 6000' 9000'

GRAPHIC SCALE

N

CONTRACT SERVICES	REV	DESCRIPTION	ENG/PE#	DATE	DRN	CHKD	APPR
	4	ISSUED FOR PROJECT RECORD	–	12/15/17	JJD	BAF	GEL
	3	UPDATED RE–NHSEC PERMIT FILING	–	7/01/15	RDW	TSW	GEL
	2	RE–ISSUED NHSEC PERMIT FILING	–	6/04/15	RDW	CRP	GEL
	1	NHSEC PERMIT FILING	–	3/23/15	JJD	CRP	GEL

DWG	REV	EPN/DESCRIPTION	CONT/PE#	DATE	DRN	CHKD	APPR

NATIONAL GRID & EVERSOURCE ENERGY

LINE 3124 345 kV TRANSMISSION
KEY SHEET
MERRIMACK VALLEY RELIABILITY PROJECT
NEW HAMPSHIRE PROJECT AREA

T 4

DRAWN JJD/TRC
ENGINEER GEL/TRC
CHECKED CRP/TRC
APPROVED GEL/TRC
DATE 01/23/15

SCALE NTS
FILE: 400298–S3124 SH.3.DWG
IMAGE:
DRAWING NO. 400298–S3124 SH.3

NU VER: 08/2012

12/15/2017 10:31 AM – jdoody – C:\pwworkingemp\pw1\jdoody\d1045458\400298–S3124 SH.3.dwg – SH03

400298-C-R-001

CONFIDENTIALITY STATEMENT: THIS DOCUMENT CONTAINS CONFIDENTIAL AND PROPRIETARY INFORMATION OF NATIONAL GRID. IT IS TO BE USED BY AUTHORIZED CONTRACTORS FOR NATIONAL GRID SOLELY IN CONNECTION WITH THE SPECIFIC PROJECT FOR WHICH IT HAS BEEN TRANSMITTED. ANY OTHER USE, ITS TRANSMITTAL TO THIRD PARTIES, OR ITS REPRODUCTION WITHOUT PRIOR EXPRESS WRITTEN AUTHORIZATION OF NATIONAL GRID IS STRICTLY PROHIBITED.

NATIONAL GRID
MERRIMACK VALLEY RELIABILITY PROJECT

nationalgrid

BLACK & VEATCH CORPORATION

VER	DATE	VERSION DESCRIPTION	PREPARED/REVIEWED/APPROVED	VERSION
1	05/22/15	NHSEC PERMIT FILING	JLM FTX NPA	
2	10/31/17	AS-BUILT AND ISSUED FOR NHSEC RECORD	DRD GC NPA	2
3				
4				
5				
6				
7				

MERRIMACK VALLEY RELIABILITY PROJECT

COVER SHEET

PREPARED BY	MKB	05/02/15
REVIEWED BY	FTX	05/02/15
APPROVED BY	NPA	05/02/15
SCALE	N.T.S.	
SHEET	1 OF 1	
INDEX	400298	

nationalgrid

PRINTED 10/31/2017 6:39 AM

PRINTED COPIES ARE NOT DOCUMENT CONTROLLED. FOR THE LATEST AUTHORIZED VERSION PLEASE REFER TO THE ENGINEERING DEPARTMENT DOCUMENTS CABINET IN DOCUMENTUM

INCHES ON ORIGINAL

400298-C-R-002

CONFIDENTIALITY STATEMENT: THIS DOCUMENT CONTAINS CONFIDENTIAL AND PROPRIETARY INFORMATION OF NATIONAL GRID. IT IS TO BE USED BY AUTHORIZED CONTRACTORS FOR NATIONAL GRID SOLELY IN CONNECTION WITH THE SPECIFIC PROJECT FOR WHICH IT HAS BEEN TRANSMITTED. ANY OTHER USE, ITS TRANSMITTAL TO THIRD PARTIES, OR ITS REPRODUCTION WITHOUT PRIOR EXPRESS WRITTEN AUTHORIZATION OF NATIONAL GRID IS STRICTLY PROHIBITED.

NATIONAL GRID
MERRIMACK VALLEY RELIABILITY PROJECT

DRAWING INDEX

DRAWING NO.	REVISION NO.	DESCRIPTION
400298-C-R-001	2	COVER SHEET
400298-C-R-002	3	DRAWING INDEX
400298-C-R-003	3	STRUCTURE OUTLINE
400298-C-R-004	2	LEGEND AND NOTES
400298-C-R-304	2	PLAN AND PROFILE-Y151
400298-C-R-305	2	PLAN AND PROFILE-Y151
400298-C-R-306	4	PLAN AND PROFILE-Y151
400298-C-R-307	4	PLAN AND PROFILE-Y151
400298-C-R-308	3	PLAN AND PROFILE-Y151
400298-C-R-309	3	PLAN AND PROFILE-Y151
400298-C-R-310	3	PLAN AND PROFILE-Y151
400298-C-R-311	3	PLAN AND PROFILE-Y151
400298-C-R-312	3	PLAN AND PROFILE-Y151
400298-C-R-706	3	PLAN AND PROFILE-3124
400298-C-R-707	3	PLAN AND PROFILE-3124
400298-C-R-708	2	PLAN AND PROFILE-3124
400298-C-R-709	3	PLAN AND PROFILE-3124
400298-C-R-710	2	PLAN AND PROFILE-3124
400298-C-R-711	3	PLAN AND PROFILE-3124
400298-C-R-712	3	PLAN AND PROFILE-3124
400298-C-R-713	2	PLAN AND PROFILE-3124
400298-C-R-714	3	PLAN AND PROFILE-3124

NOTES
REFER TO PSNH NHSEC PERMIT DRAWING SET FOR LINE 3124, Y151 KEY SHEET DRAWING

DRAWING NO.	REVISION NO.	DESCRIPTION
400298-C-S-12	2	115_ST_DASU_RS FRAMING DETAIL
400298-C-S-13	2	115_ST_HFDE_SW FRAMING DETAIL
400298-C-S-14A	2	115_ST_3PDE_SS FRAMING DETAIL
400298-C-S-14B	2	115_ST_3PDE_SS FRAMING DETAIL
400298-C-S-15	2	115_ST_DADE_SS FRAMING DETAIL
400298-C-S-16	2	115_ST_DADE_DS FRAMING DETAIL
400298-C-S-17	4	115_ST_SPDE_SW FRAMING DETAIL
400298-C-S-18	3	115_ST_SPDE FRAMING DETAIL
400298-C-S-19	3	115_WD_HFDE FRAMING DETAIL
400298-C-S-20	2	115_ST_SPDE FRAMING DETAIL
400298-C-S-51	2	345_ST_HFSU_NB FRAMING DETAIL
400298-C-S-52 SH. 1	2	345_ST_HFDE FRAMING DETAIL
400298-C-S-52 SH. 2	2	345_ST_HFDE FRAMING DETAIL
400298-C-S-53	2	345_ST_3PDE FRAMING DETAIL
400298-C-S-54	2	345_ST_SPDE FRAMING DETAIL
400298-C-F-EX-01	1	REINFORCED CONCRETE CAISSON FOUNDATION (SOIL)
400298-C-F-EX-02	1	REINFORCED CONCRETE CAISSON FOUNDATION (GROUTED REBAR)
400298-C-F-EX-03	1	REINFORCED CONCRETE CAISSON FOUNDATION (ROCK SOCKET)
SP.06.01.301.401	6	DIRECT EMBEDMENT FOUNDATION
SP.06.01.301.101 SH. 1	14	GROUNDING DETAILS FOR TRANSMISSION LINE STRUCTURES
SP.06.01.301.101 SH. 2	14	GROUNDING DETAILS FOR TRANSMISSION LINE STRUCTURES
SP.06.01.301.101 SH. 3	14	GROUNDING DETAILS FOR TRANSMISSION LINE STRUCTURES
SP.06.01.301.101 SH. 4	14	GROUNDING DETAILS FOR WOOD SWITCH STRUCTURES
SP.06.01.301.101 SH. 5	14	GROUNDING DETAILS FOR STEEL SWITCH STRUCTURES
SP.06.01.301.101 SH. 6	14	ALT. GROUNDING DETAILS INSTALL. W/O STEEL CULVERT
400298-C-P-01 SH. 1	4	PHASING DIAGRAM-Y151
400298-C-P-01 SH. 2	5	PHASING DIAGRAM-Y151
400298-C-P-05	3	PHASING DIAGRAM-3124
400298-C-X-08 (E)	5	EXISTING CROSS SECTION
400298-C-X-08 (P)	5	PROPOSED CROSS SECTION
400298-C-X-09 (E)	5	EXISTING CROSS SECTION
400298-C-X-09 (P)	4	PROPOSED CROSS SECTION

VER	DATE	VERSION DESCRIPTION	PREPARED/REVIEWED/APPROVED
1	05/22/15	NHSEC PERMIT FILING	JLM FTX NPA
2	02/05/16	REVISED NHSEC FILING	MKB FTX NPA
3	10/31/17	AS-BUILT AND ISSUED FOR NHSEC RECORD	DRD GC NPA
4			
5			
6			
7			

VERSION 3

nationalgrid

PREPARED BY	MKB 02/05/16
REVIEWED BY	FTX 02/05/16
APPROVED BY	NPA 02/05/16
SCALE	N.T.S.
SHEET	1 OF 1
INDEX	400298

MERRIMACK VALLEY RELIABILITY PROJECT
DRAWING INDEX

PRINTED 12/12/2017 5:19 PM

PRINTED COPIES ARE NOT DOCUMENT CONTROLLED. FOR THE LATEST AUTHORIZED VERSION PLEASE REFER TO THE ENGINEERING DEPARTMENT DOCUMENTS CABINET IN DOCUMENTUM

INCHES ON ORIGINAL

400298-C-R-003

CONFIDENTIALITY STATEMENT: THIS DOCUMENT CONTAINS CONFIDENTIAL AND PROPRIETARY INFORMATION OF NATIONAL GRID SOLELY IN CONNECTION WITH THE SPECIFIC PROJECT FOR WHICH IT HAS BEEN TRANSMITTED. ANY OTHER USE, ITS TRANSMITTAL TO THIRD PARTIES, OR ITS REPRODUCTION WITHOUT PRIOR EXPRESS WRITTEN AUTHORIZATION OF NATIONAL GRID IS STRICTLY PROHIBITED.

NATIONAL GRID
MERRIMACK VALLEY RELIABILITY PROJECT

STRUCTURE OUTLINE

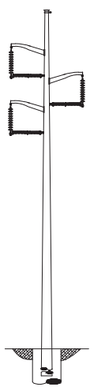

115_ST_DASU_RS
STEEL DAVIT ARM
SUSPENSION
DWG. 400298-C-S-12

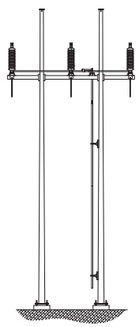

115_ST_HFDE_SW
STEEL H-FRAME
DEAD END-SWITCH
DWG. 400298-C-S-13

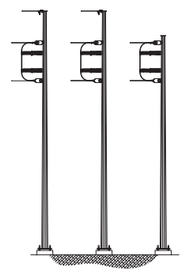

115_ST_3PDE_SS
STEEL 3 POLE - PSNH DEMARCATION
DEAD END
DWG. 400298-C-S-14A

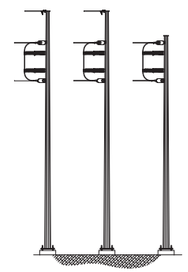

115_ST_3PDE_SS
STEEL 3 POLE
DEAD END
DWG. 400298-C-S-14B

115_ST_DADE_SS
STEEL DAVIT ARM
DEAD END-SINGLE STRING
DWG. 400298-C-S-15

115_ST_DADE_DS
STEEL DAVIT ARM
DEAD END-DOUBLE STRING
DWG. 400298-C-S-16

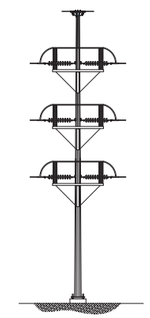

115_ST_SPDE_SW
STEEL SINGLE POLE
DEAD END-SWITCH
DWG. 400298-C-S-17

115_ST_SPDE
STEEL SINGLE POLE
3-WAY DEAD END
DWG. 400298-C-S-18

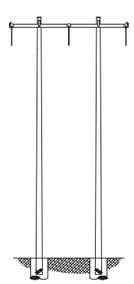

115_WD_HFDE
WOOD H-FRAME
DEAD END
DWG. 400298-C-S-19

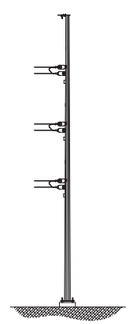

115_ST_SPDE
STEEL SINGLE POLE
DEAD END
DWG. 400298-C-S-20

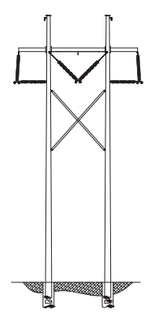

345_ST_HFSU_NB
STEEL H-FRAME
SUSPENSION
DWG. 400298-C-S-51

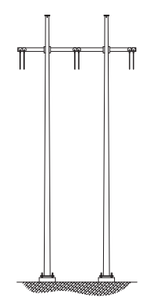

345_ST_HFDE
STEEL H-FRAME
DEAD END
DWG. 400298-C-S-52

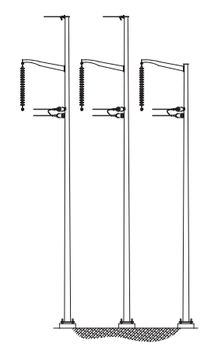

345_ST_3PDE
STEEL 3 POLE
DEAD END
DWG. 400298-C-S-53

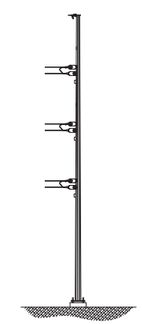

345_ST_SPDE
STEEL SINGLE POLE
DEAD END
DWG. 400298-C-S-54

VER	DATE	VERSION DESCRIPTION	PREPARED BY	REVIEWED BY	APPROVED BY	VERSION
1	05/22/15	NHSEC PERMIT FILING	JLM	FTX	NPA	3
2	10/29/15	115KV ST-HFDE REVISED TO 115KV WD-HFDE	MKB	FTX	NPA	
3	10/31/17	AS-BUILT AND ISSUED FOR NHSEC RECORD	DRD	GC	NPA	
4						
5						
6						
7						

nationalgrid

PREPARED BY	MKB	02/05/16
REVIEWED BY	FTX	02/05/16
APPROVED BY	NPA	02/05/16
SCALE	N.T.S.	
SHEET	1 OF 1	
INDEX	400298	

MERRIMACK VALLEY RELIABILITY PROJECT

STRUCTURE OUTLINE

PRINTED 10/30/2017 8:23 AM

PRINTED COPIES ARE NOT DOCUMENT CONTROLLED. FOR THE LATEST AUTHORIZED VERSION PLEASE REFER TO THE ENGINEERING DEPARTMENT DOCUMENTS CABINET IN DOCUMENTUM

INCHES ON ORIGINAL

400298-C-R-004

CONFIDENTIALITY STATEMENT: THIS DOCUMENT CONTAINS CONFIDENTIAL AND PROPRIETARY INFORMATION OF NATIONAL GRID, SOLELY IN CONNECTION WITH THE SPECIFIC PROJECT FOR WHICH IT HAS BEEN TRANSMITTED. ANY OTHER USE, ITS TRANSMITTAL TO THIRD PARTIES, OR ITS REPRODUCTION WITHOUT PRIOR EXPRESS WRITTEN AUTHORIZATION OF NATIONAL GRID IS STRICTLY PROHIBITED.

NATIONAL GRID
MERRIMACK VALLEY RELIABILITY PROJECT

LEGEND AND NOTES

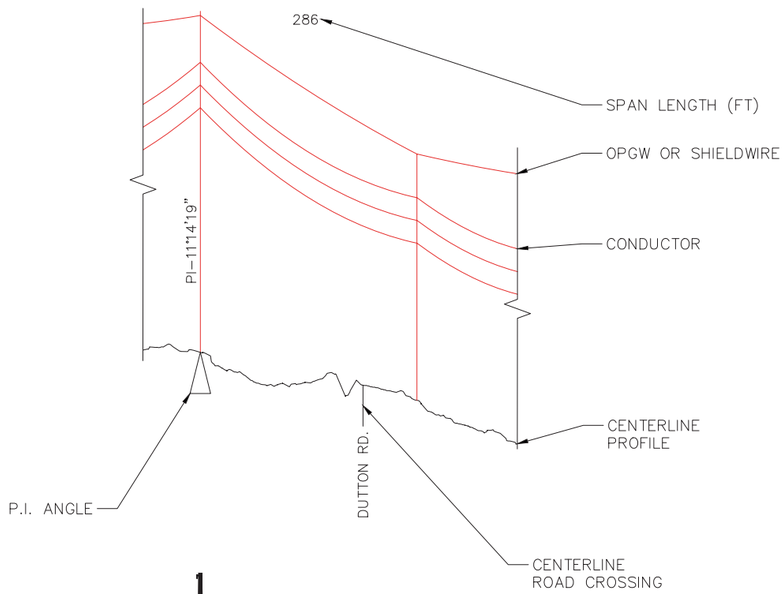

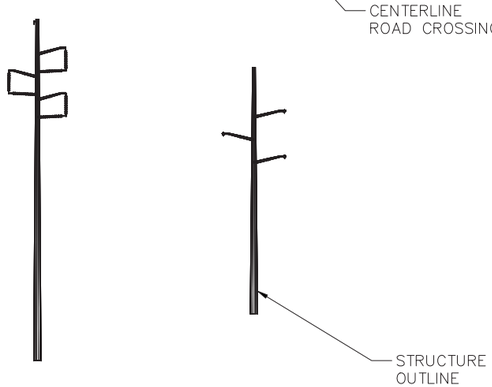

PLAN LEGEND

- WETLANDS
- ROW LIMITS
- STREAM OR BROOK
- CONTOURS
- EXISTING TRANSMISSION CENTERLINE
- PROPERTY LINE
- TOWN LINE
- PROPOSED TRANSMISSION CENTERLINE
- FEMA FLOOD LINE
- EXISTING DISTRIBUTION LINE
- STRUCTURE CENTER

NOTES

1. PHYSICAL FEATURES MAPPED USING AERIAL IMAGERY.
2. ENVIRONMENTAL DELINEATIONS CONDUCTED BY VHB IN 2014.
3. COORDINATES BASED ON UTM ZONE 18N.
4. LEGAL SURVEY OF PROPERTY LINES PRODUCED BY BEALS & THOMAS.
5. DATA FOR GENERAL REFERENCE ONLY

PROFILE LEGEND

1 130+00 345_ST_HFSU_NB 90' STEEL

- MATERIAL
- STRUCTURE HEIGHT
- STRUCTURE TYPE
- STATION
- STRUCTURE NUMBER

WIRE DATA

LINE	WIRE	# OF CABLES	TYPE	DIA. (IN.)	WEIGHT/ 1000 FT	CABLE STRENGTH (LBS.)
3124	NEW OPGW	1	48 COUNT FIBER	0.500	303	14,214
	NEW SHIELD WIRE	1	3/8"-7 STRAND EHS	0.360	273	15,400
	NEW CONDUCTOR	6	FALCON 1590 KCMIL 54/19 ACSR	1.545	2044	54,500
Y151	NEW OPGW	1	144 COUNT FIBER	0.630	471	23,980
	NEW CONDUCTOR	3	DRAKE 795 KCMIL 26/7 ACSS HS285	1.108	1093	32,600

VER	DATE	VERSION DESCRIPTION	PREPARED/REVIEWED/APPROVED	VERSION
1	05/22/15	NHSEC PERMIT FILING	JLM FTX NPA	2
2	10/31/17	AS-BUILT AND ISSUED FOR NHSEC RECORD	DRD GC NPA	
3				
4				
5				
6				
7				

nationalgrid

PREPARED BY MKB 02/05/16
REVIEWED BY FTX 02/05/16
APPROVED BY NPA 02/05/16
SCALE N.T.S.
SHEET 1 OF 1
INDEX 400298

MERRIMACK VALLEY RELIABILITY PROJECT

LEGEND AND NOTES

PRINTED COPIES ARE NOT DOCUMENT CONTROLLED. FOR THE LATEST AUTHORIZED VERSION PLEASE REFER TO THE ENGINEERING DEPARTMENT DOCUMENTS CABINET IN DOCUMENTUM

PRINTED 10/31/2017 6:40 AM

INCHES ON ORIGINAL

400298-C-R-304

CONFIDENTIALITY STATEMENT: THIS DOCUMENT CONTAINS CONFIDENTIAL AND PROPRIETARY INFORMATION OF NATIONAL GRID. IT IS TO BE USED BY AUTHORIZED CONTRACTORS FOR NATIONAL GRID SOLELY IN CONNECTION WITH THE SPECIFIC PROJECT FOR WHICH IT HAS BEEN TRANSMITTED. ANY OTHER USE, ITS TRANSMITTAL TO THIRD PARTIES, OR ITS REPRODUCTION WITHOUT PRIOR EXPRESS WRITTEN AUTHORIZATION OF NATIONAL GRID IS STRICTLY PROHIBITED.

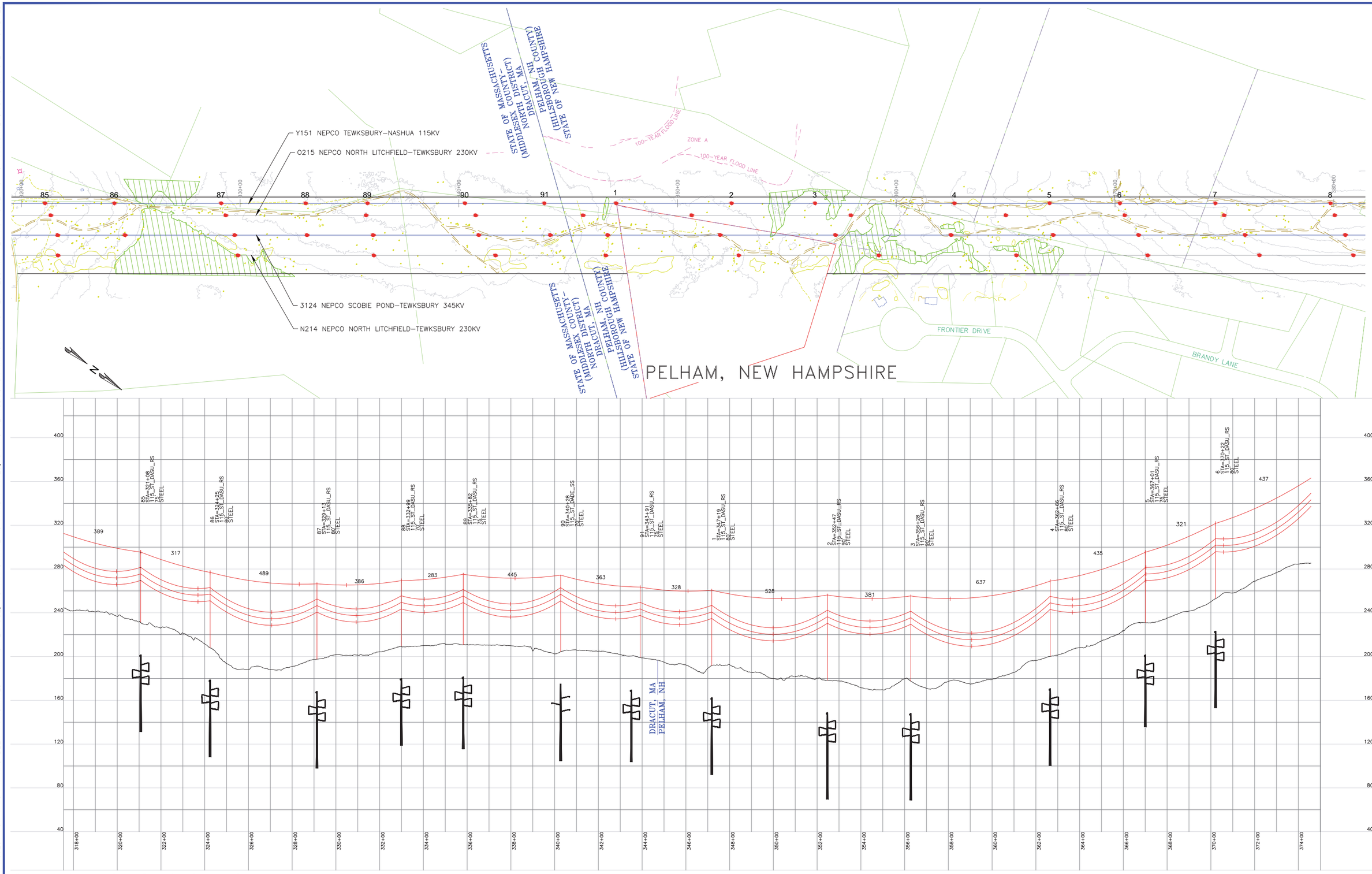

VER	DATE	VERSION DESCRIPTION	PREPARED BY	REVIEWED BY	APPROVED BY
1	05/22/15	NHSEC PERMIT FILING	JLM	FTX	NPA
2	10/31/17	AS-BUILT AND ISSUED FOR NHSEC RECORD	DRD	GC	NPA
3					
4					
5					
6					
7					

VERSION 2

nationalgrid

MERRIMACK VALLEY RELIABILITY PROJECT

PLAN AND PROFILE DRAWINGS
SCOBIE POND TO TEWKSBURY
LINE Y151 115KV

PREPARED BY	MKB	02/05/16
REVIEWED BY	FTX	02/05/16
APPROVED BY	NPA	02/05/16
SCALE	–	
SHEET	1 OF 1	
INDEX	400298	

PRINTED 10/31/2017 4:48 PM

PRINTED COPIES ARE NOT DOCUMENT CONTROLLED. FOR THE LATEST AUTHORIZED VERSION PLEASE REFER TO THE ENGINEERING DEPARTMENT DOCUMENTS CABINET IN DOCUMENTUM

INCHES ON ORIGINAL

400298-C-R-305

CONFIDENTIALITY STATEMENT: THIS DOCUMENT CONTAINS CONFIDENTIAL AND PROPRIETARY INFORMATION OF NATIONAL GRID. IT IS TO BE USED BY AUTHORIZED CONTRACTORS FOR NATIONAL GRID SOLELY IN CONNECTION WITH THE SPECIFIC PROJECT FOR WHICH IT HAS BEEN TRANSMITTED. ANY OTHER USE, ITS TRANSMITTAL TO THIRD PARTIES, OR ITS REPRODUCTION WITHOUT PRIOR EXPRESS WRITTEN AUTHORIZATION OF NATIONAL GRID IS STRICTLY PROHIBITED.

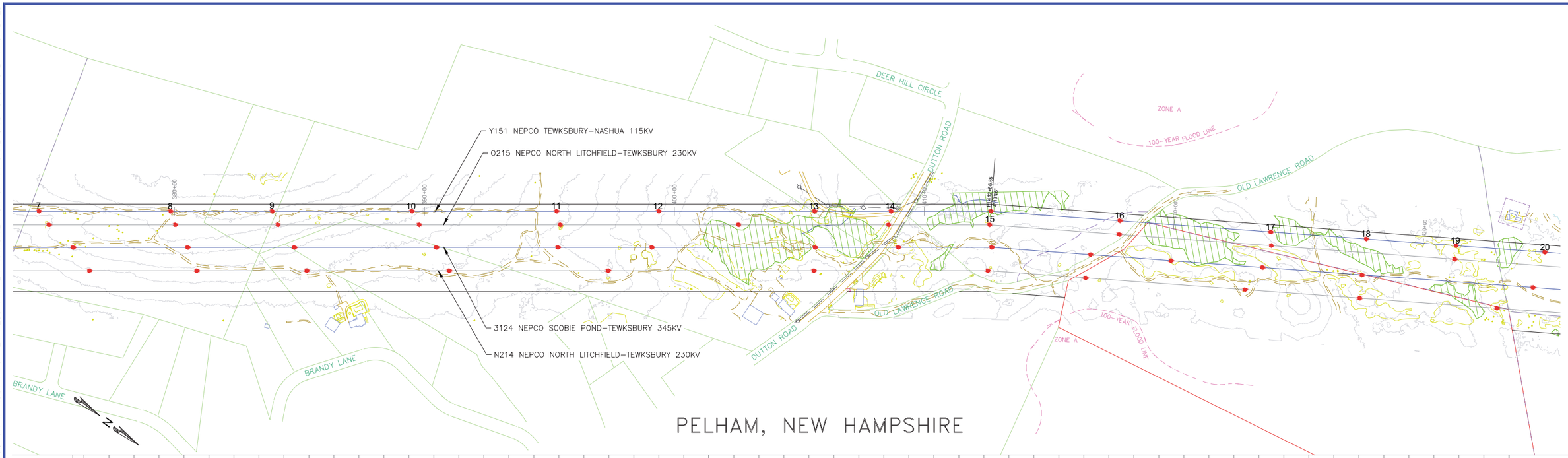

PELHAM, NEW HAMPSHIRE

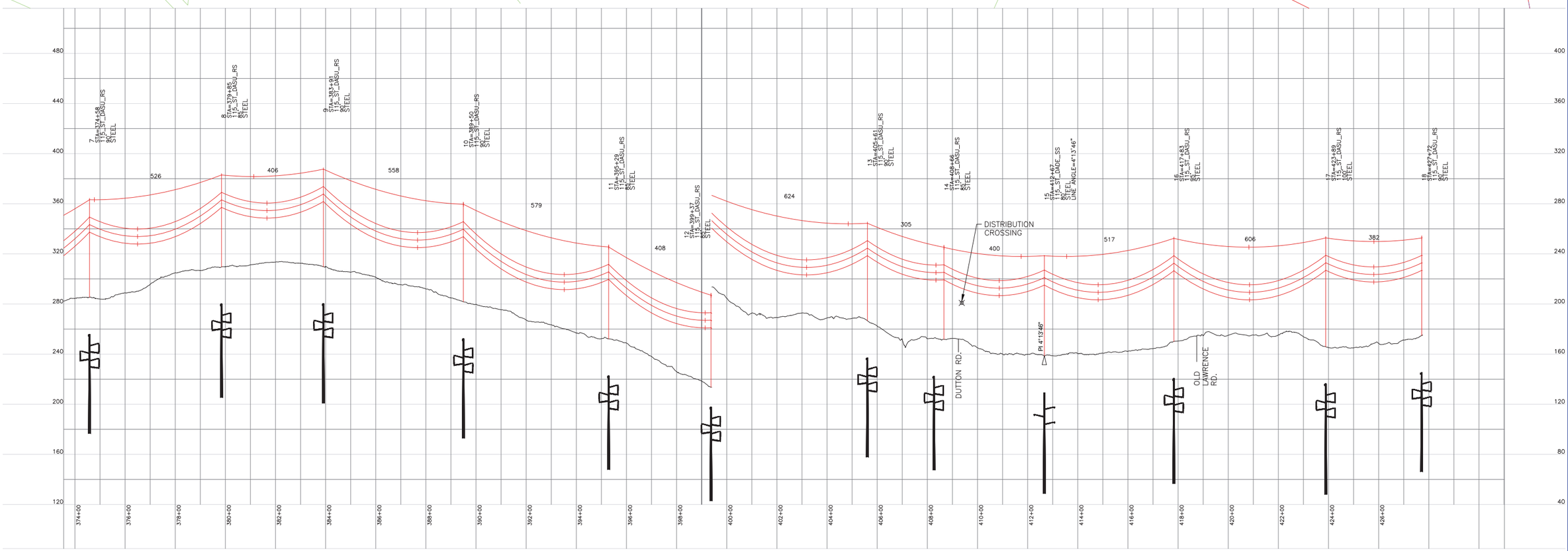

0 200' 400'
HORIZONTAL SCALE 1:200'

0 20' 40' 80'
VERTICAL SCALE 1:40'

PROPOSED 144 COUNT FIBER OPGW
PROPOSED DRAKE 795 KCMIL 26/7 ACSS HS285

OPGW SHOWN AT NESC HEAVY 4500 LBS, 60°F MAX SAG
CONDUCTOR SHOWN AT NESC HEAVY 8000 LBS, 392°F MAX SAG

VER	DATE	VERSION DESCRIPTION	PREPARED BY	REVIEWED BY	APPROVED BY
1	05/22/15	NHSEC PERMIT FILING	JLM	FTX	NPA
2	10/31/17	AS–BUILT AND ISSUED FOR NHSEC RECORD	DRD	GC	NPA
3					
4					
5					
6					
7					

VERSION 2

nationalgrid

PREPARED BY	MKB	02/05/16
REVIEWED BY	FTX	02/05/16
APPROVED BY	NPA	02/05/16
SCALE	–	
SHEET	1 OF 1	
INDEX	400298	

MERRIMACK VALLEY RELIABILITY PROJECT

PLAN AND PROFILE DRAWINGS
SCOBIE POND TO TEWKSBURY
LINE Y151 115KV

PRINTED 10/31/2017 4:42 PM

PRINTED COPIES ARE NOT DOCUMENT CONTROLLED. FOR THE LATEST AUTHORIZED VERSION PLEASE REFER TO THE ENGINEERING DEPARTMENT DOCUMENTS CABINET IN DOCUMENTUM

INCHES ON ORIGINAL

400298-C-R-306

CONFIDENTIALITY STATEMENT: THIS DOCUMENT CONTAINS CONFIDENTIAL AND PROPRIETARY INFORMATION OF NATIONAL GRID. IT IS TO BE USED BY AUTHORIZED CONTRACTORS FOR NATIONAL GRID SOLELY IN CONNECTION WITH THE SPECIFIC PROJECT FOR WHICH IT HAS BEEN TRANSMITTED. ANY OTHER USE, ITS TRANSMITTAL TO THIRD PARTIES, OR ITS REPRODUCTION WITHOUT PRIOR EXPRESS WRITTEN AUTHORIZATION OF NATIONAL GRID IS STRICTLY PROHIBITED.

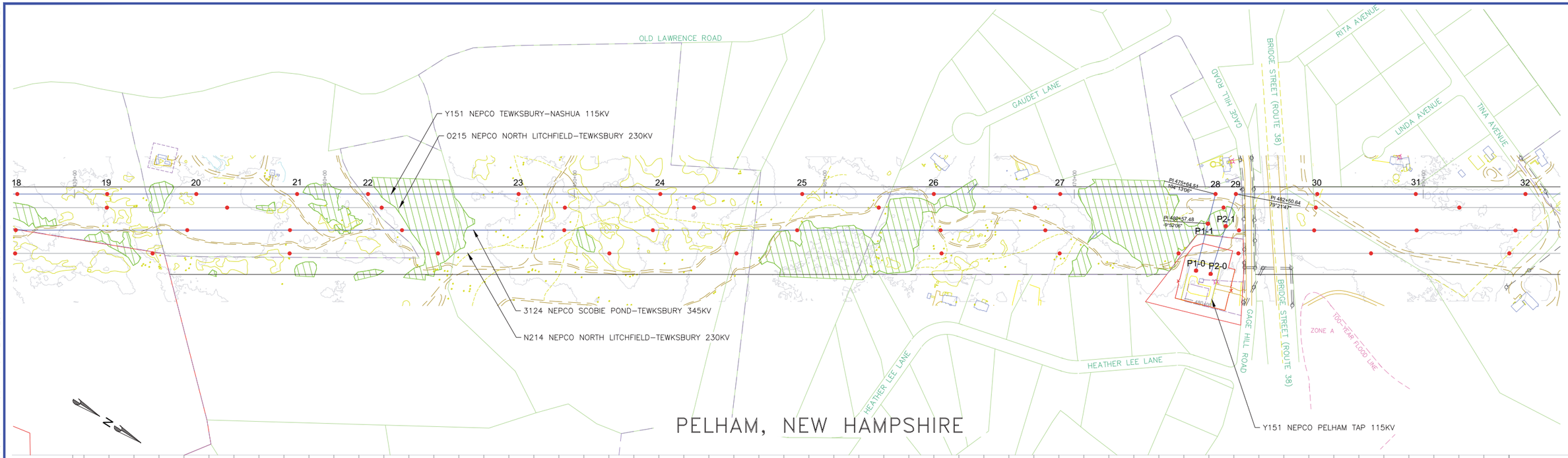

PELHAM, NEW HAMPSHIRE

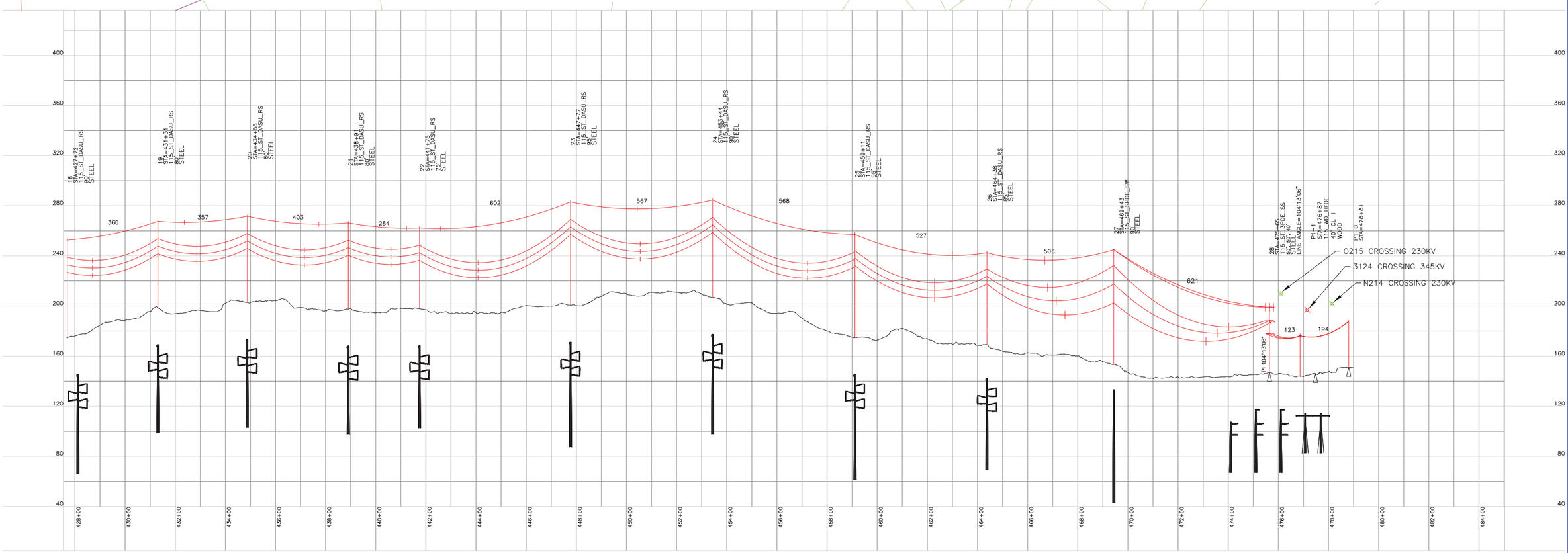

0 200' 400'
HORIZONTAL SCALE 1:200'

0 20' 40' 80'
VERTICAL SCALE 1:40'

PROPOSED 144 COUNT FIBER OPGW
PROPOSED DRAKE 795 KCMIL 26/7 ACSS HS285

OPGW SHOWN AT NESC HEAVY 4500 LBS, 60°F MAX SAG
CONDUCTOR SHOWN AT NESC HEAVY 8000 LBS, 392°F MAX SAG

VER	DATE	VERSION DESCRIPTION	PREPARED	REVIEWED	APPROVED
1	05/22/15	NHSEC PERMIT FILING	JLM	FTX	NPA
2	10/29/15	115KV ST–HFDE TAP STRUCTURE REVISED TO 115 WD–HFDE	MKB	FTX	NPA
3	02/05/16	REVISED NHSEC FILING	MKB	FTX	NPA
4	10/31/17	AS–BUILT AND ISSUED FOR NHSEC RECORD	DRD	GC	NPA
5					
6					
7					

VERSION 4

nationalgrid

PREPARED BY	MKB	02/05/16
REVIEWED BY	FTX	02/05/16
APPROVED BY	NPA	02/05/16
SCALE	–	
SHEET	1 OF 1	
INDEX	400298	

MERRIMACK VALLEY RELIABILITY PROJECT

PLAN AND PROFILE DRAWINGS
SCOBIE POND TO TEWKSBURY
LINE Y151 115KV

PRINTED 11/1/2017 10:29 AM

PRINTED COPIES ARE NOT DOCUMENT CONTROLLED. FOR THE LATEST AUTHORIZED VERSION PLEASE REFER TO THE ENGINEERING DEPARTMENT DOCUMENTS CABINET IN DOCUMENTUM

INCHES ON ORIGINAL

400298-C-R-306

CONFIDENTIALITY STATEMENT: THIS DOCUMENT CONTAINS CONFIDENTIAL AND PROPRIETARY INFORMATION OF NATIONAL GRID. IT IS TO BE USED BY AUTHORIZED CONTRACTORS FOR NATIONAL GRID SOLELY IN CONNECTION WITH THE SPECIFIC PROJECT FOR WHICH IT HAS BEEN TRANSMITTED. ANY OTHER USE, ITS TRANSMITTAL TO THIRD PARTIES, OR ITS REPRODUCTION WITHOUT PRIOR EXPRESS WRITTEN AUTHORIZATION OF NATIONAL GRID IS STRICTLY PROHIBITED.

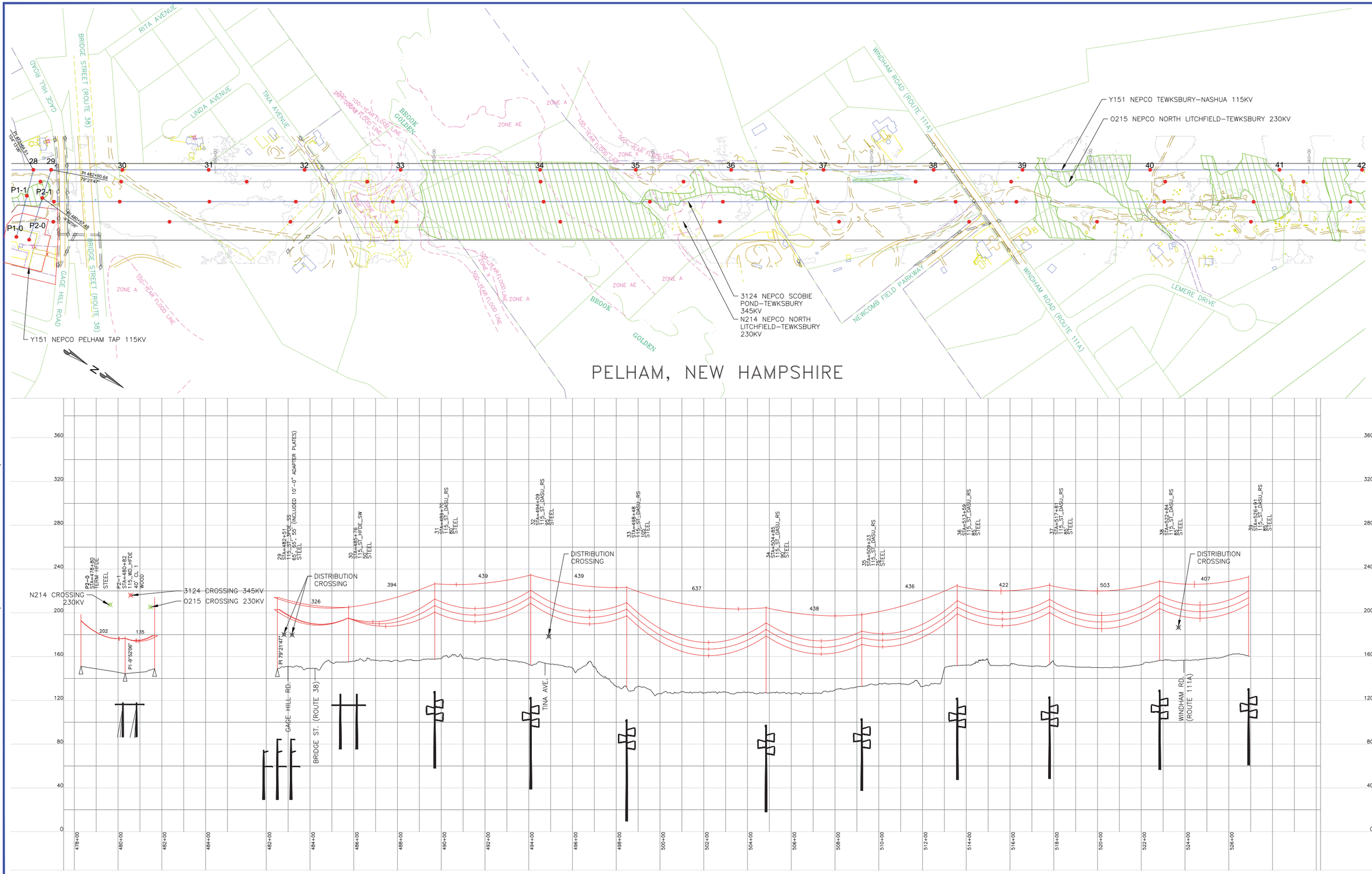

VER	DATE	VERSION DESCRIPTION	PREPARED BY	REVIEWED BY	APPROVED BY
1	05/22/15	NHSEC PERMIT FILING	JLM	FTX	NPA
2	10/29/15	115KV ST-HFDE TAP STRUCTURE REVISED TO 115 WD-HFDE	MKB	FTX	NPA
3	02/05/16	REVISED NHSEC FILING	MKB	FTX	NPA
4	10/31/17	AS-BUILT AND ISSUED FOR NHSEC RECORD	DRD	GC	NPA
5					
6					
7					

VERSION 4

nationalgrid

MERRIMACK VALLEY RELIABILITY PROJECT

PLAN AND PROFILE DRAWINGS
SCOBIE POND TO TEWKSBURY
LINE Y151 115KV

PREPARED BY	MKB	02/05/16
REVIEWED BY	FTX	02/05/16
APPROVED BY	NPA	02/05/16
SCALE	–	
SHEET	1 OF 1	
INDEX	400298	

PRINTED 12/15/2017 3:29 PM

PRINTED COPIES ARE NOT DOCUMENT CONTROLLED. FOR THE LATEST AUTHORIZED VERSION PLEASE REFER TO THE ENGINEERING DEPARTMENT DOCUMENTS CABINET IN DOCUMENTUM

INCHES ON ORIGINAL

CONFIDENTIALITY STATEMENT: THIS DOCUMENT CONTAINS CONFIDENTIAL AND PROPRIETARY INFORMATION OF NATIONAL GRID. IT IS TO BE USED BY AUTHORIZED CONTRACTORS FOR NATIONAL GRID SOLELY IN CONNECTION WITH THE SPECIFIC PROJECT FOR WHICH IT HAS BEEN TRANSMITTED. ANY OTHER USE, ITS TRANSMITTAL TO THIRD PARTIES, OR ITS REPRODUCTION WITHOUT PRIOR EXPRESS WRITTEN AUTHORIZATION OF NATIONAL GRID IS STRICTLY PROHIBITED.

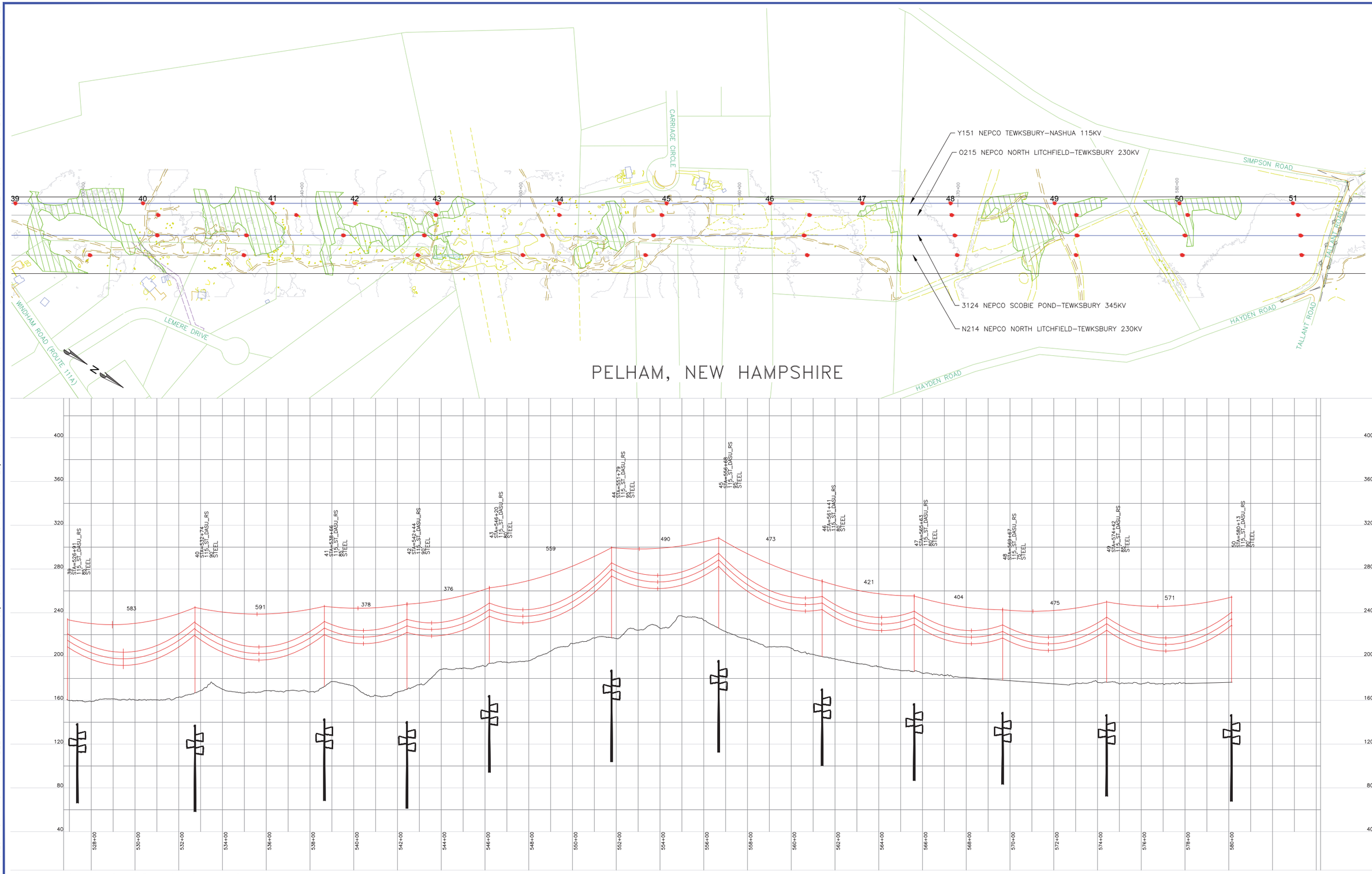

0 200' 400'
HORIZONTAL SCALE 1:200'

0 20' 40' 80'
VERTICAL SCALE 1:40'

PROPOSED 144 COUNT FIBER OPGW
PROPOSED DRAKE 795 KCMIL 26/7 ACSS HS285

OPGW SHOWN AT NESC HEAVY 4500 LBS, 60°F MAX SAG
CONDUCTOR SHOWN AT NESC HEAVY 8000 LBS, 392°F MAX SAG

VER	DATE	VERSION DESCRIPTION	PREPARED BY	REVIEWED BY	APPROVED BY
1	05/22/15	NHSEC PERMIT FILING	JLM	FTX	NPA
2	02/05/16	REVISED NHSEC FILING	MKB	FTX	NPA
3	10/31/17	AS-BUILT AND ISSUED FOR NHSEC RECORD	DRD	GC	NPA
4					
5					
6					
7					

VERSION 3

nationalgrid

MERRIMACK VALLEY RELIABILITY PROJECT

PLAN AND PROFILE DRAWINGS
SCOBIE POND TO TEWKSBURY
LINE Y151 115KV

PREPARED BY	MKB	02/05/16
REVIEWED BY	FTX	02/05/16
APPROVED BY	NPA	02/05/16
SCALE	–	
SHEET	1 OF 1	
INDEX	400298	

PRINTED 10/31/2017 4:43 PM

PRINTED COPIES ARE NOT DOCUMENT CONTROLLED. FOR THE LATEST AUTHORIZED VERSION PLEASE REFER TO THE ENGINEERING DEPARTMENT DOCUMENTS CABINET IN DOCUMENTUM

INCHES ON ORIGINAL

400298-C-R-309

CONFIDENTIALITY STATEMENT: THIS DOCUMENT CONTAINS CONFIDENTIAL AND PROPRIETARY INFORMATION OF NATIONAL GRID. IT IS TO BE USED BY AUTHORIZED CONTRACTORS FOR NATIONAL GRID SOLELY IN CONNECTION WITH THE SPECIFIC PROJECT FOR WHICH IT HAS BEEN TRANSMITTED. ANY OTHER USE, ITS TRANSMITTAL TO THIRD PARTIES, OR ITS REPRODUCTION WITHOUT PRIOR EXPRESS WRITTEN AUTHORIZATION OF NATIONAL GRID IS STRICTLY PROHIBITED.

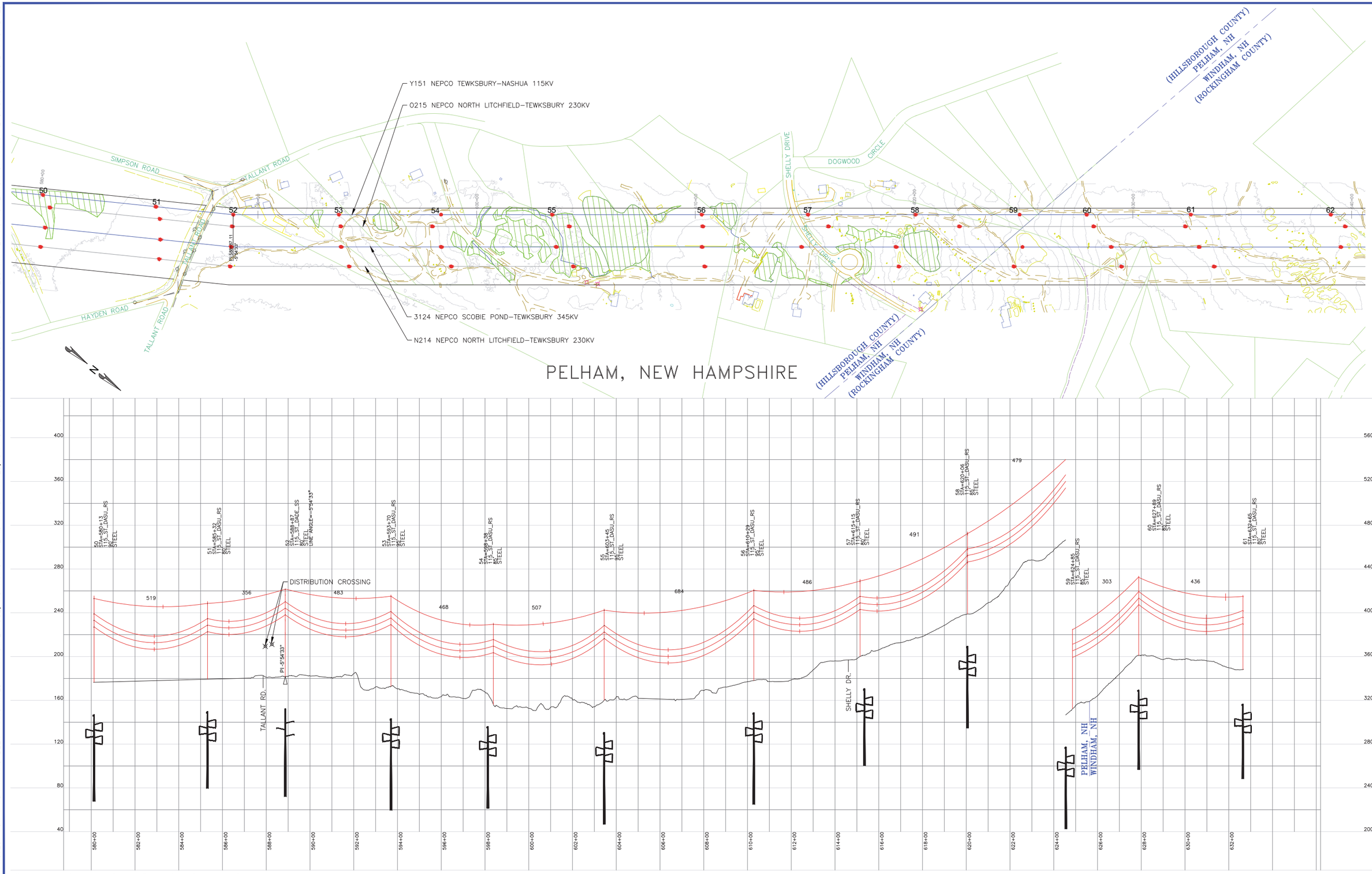

VER	DATE	VERSION DESCRIPTION	PREPARED BY	REVIEWED BY	APPROVED BY
1	05/22/15	NHSEC PERMIT FILING	JLM	FTX	NPA
2	10/29/15	RELOCATED Y151 STRUCTURE 60	MKB	FTX	NPA
3	10/31/17	AS-BUILT AND ISSUED FOR NHSEC RECORD	DRD	GC	NPA
4					
5					
6					
7					

VERSION 3

nationalgrid

MERRIMACK VALLEY RELIABILITY PROJECT

PLAN AND PROFILE DRAWINGS
SCOBIE POND TO TEWKSBURY
LINE Y151 115KV

PREPARED BY	MKB	02/05/16
REVIEWED BY	FTX	02/05/16
APPROVED BY	NPA	02/05/16
SCALE	–	
SHEET	1 OF 1	
INDEX	400298	

PRINTED 11/1/2017 10:30 AM

PRINTED COPIES ARE NOT DOCUMENT CONTROLLED. FOR THE LATEST AUTHORIZED VERSION PLEASE REFER TO THE ENGINEERING DEPARTMENT DOCUMENTS CABINET IN DOCUMENTUM

INCHES ON ORIGINAL

CONFIDENTIALITY STATEMENT: THIS DOCUMENT CONTAINS CONFIDENTIAL AND PROPRIETARY INFORMATION OF NATIONAL GRID. IT IS TO BE USED BY AUTHORIZED CONTRACTORS FOR NATIONAL GRID SOLELY IN CONNECTION WITH THE SPECIFIC PROJECT FOR WHICH IT HAS BEEN TRANSMITTED. ANY OTHER USE, ITS TRANSMITTAL TO THIRD PARTIES, OR ITS REPRODUCTION WITHOUT PRIOR EXPRESS WRITTEN AUTHORIZATION OF NATIONAL GRID IS STRICTLY PROHIBITED.

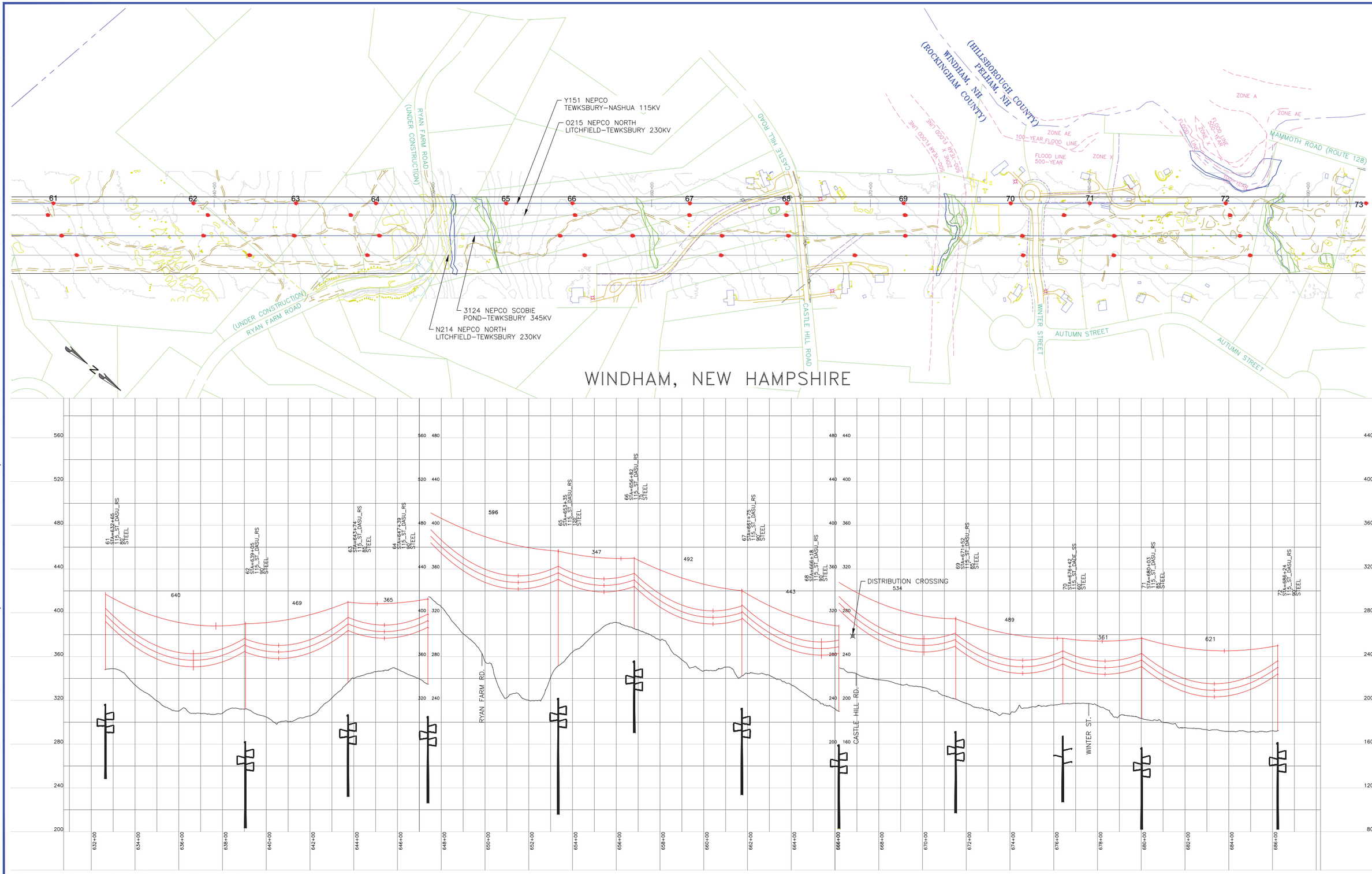

VER	DATE	VERSION DESCRIPTION	PREPARED BY	REVIEWED BY	APPROVED BY
1	05/22/15	NHSEC PERMIT FILING	JLM	FTX	NPA
2	02/05/16	REVISED NHSEC FILING	MKB	FTX	NPA
3	10/31/17	AS-BUILT AND ISSUED FOR NHSEC RECORD	DRD	GC	NPA
4					
5					
6					
7					

VERSION 3

nationalgrid

MERRIMACK VALLEY RELIABILITY PROJECT

PLAN AND PROFILE DRAWINGS
SCOBIE POND TO TEWKSBURY
LINE Y151 115KV

PREPARED BY	MKB	02/05/16
REVIEWED BY	FTX	02/05/16
APPROVED BY	NPA	02/05/16
SCALE	–	
SHEET	1 OF 1	
INDEX	400298	

PRINTED 10/31/2017 4:43 PM

PRINTED COPIES ARE NOT DOCUMENT CONTROLLED. FOR THE LATEST AUTHORIZED VERSION PLEASE REFER TO THE ENGINEERING DEPARTMENT DOCUMENTS CABINET IN DOCUMENTUM

INCHES ON ORIGINAL

CONFIDENTIALITY STATEMENT: THIS DOCUMENT CONTAINS CONFIDENTIAL AND PROPRIETARY INFORMATION OF NATIONAL GRID. IT IS TO BE USED BY AUTHORIZED CONTRACTORS FOR NATIONAL GRID SOLELY IN CONNECTION WITH THE SPECIFIC PROJECT FOR WHICH IT HAS BEEN TRANSMITTED. ANY OTHER USE, ITS TRANSMITTAL TO THIRD PARTIES, OR ITS REPRODUCTION WITHOUT PRIOR EXPRESS WRITTEN AUTHORIZATION OF NATIONAL GRID IS STRICTLY PROHIBITED.

400298-C-R-311

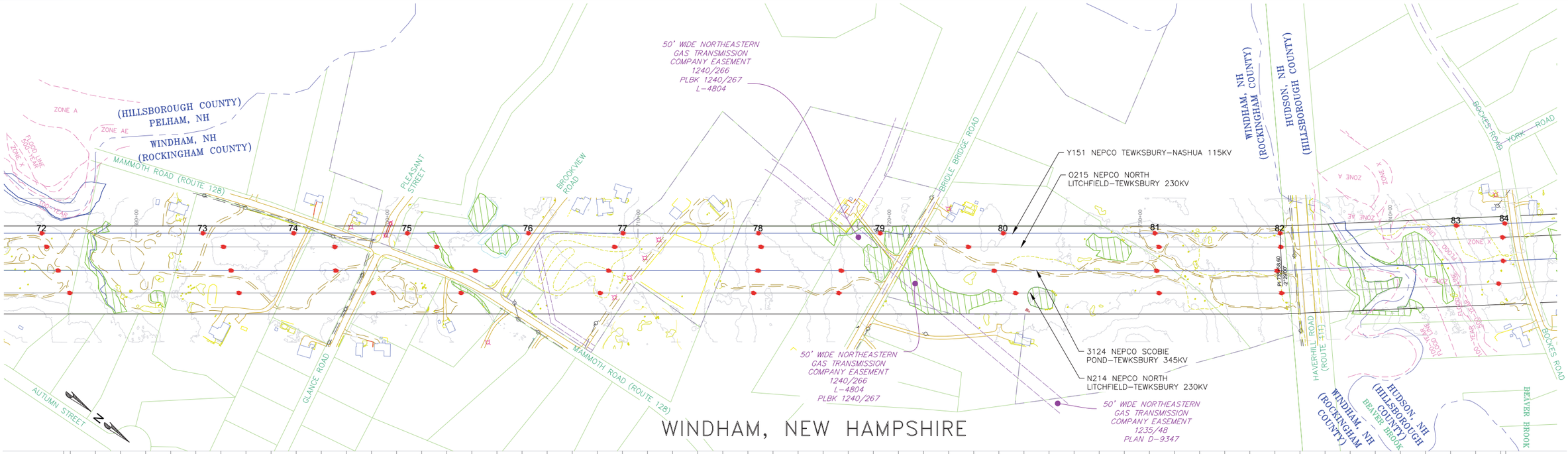

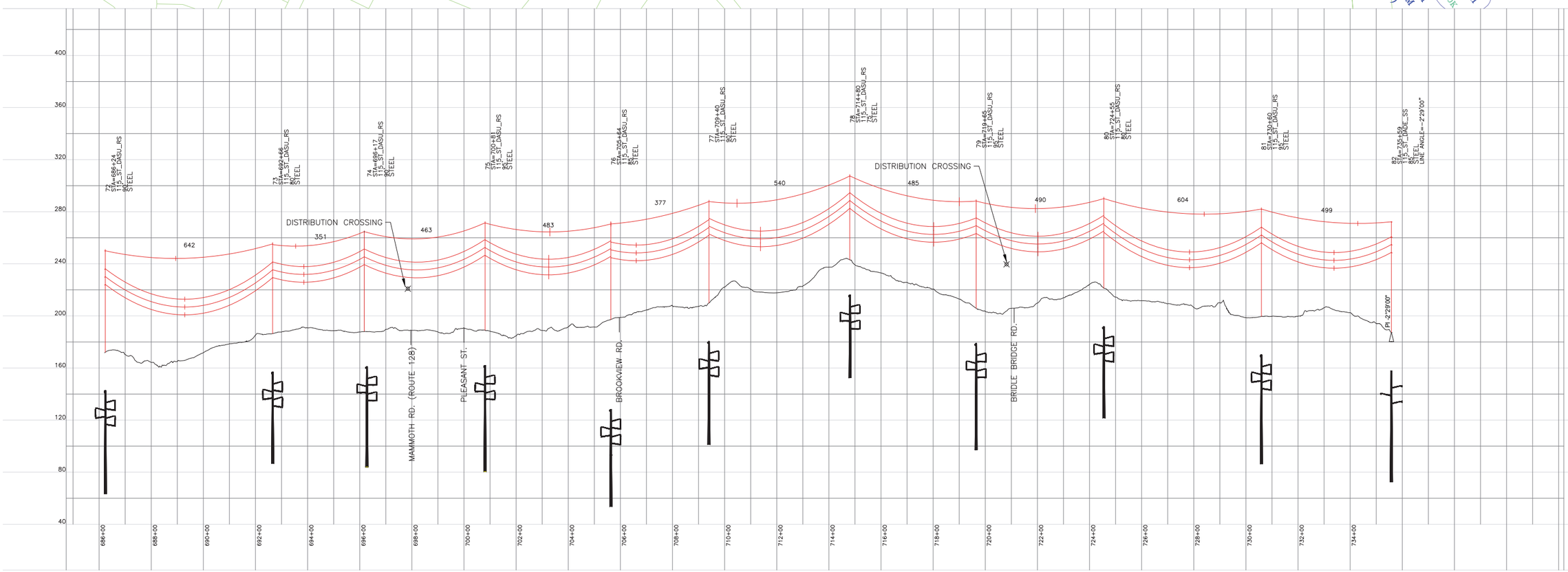

0 200' 400'
HORIZONTAL SCALE 1:200'

0 20' 40' 80'
VERTICAL SCALE 1:40'

PROPOSED 144 COUNT FIBER OPGW
PROPOSED DRAKE 795 KCMIL 26/7 ACSS HS285

OPGW SHOWN AT NESC HEAVY 4500 LBS, 60°F MAX SAG
CONDUCTOR SHOWN AT NESC HEAVY 8000 LBS, 392°F MAX SAG

VER	DATE	VERSION DESCRIPTION	PREPARED BY	REVIEWED BY	APPROVED BY
1	05/22/15	NHSEC PERMIT FILING	JLM	FTX	NPA
2	02/05/16	REVISED NHSEC FILING	MKB	FTX	NPA
3	10/31/17	AS-BUILT AND ISSUED FOR NHSEC RECORD	DRD	GC	NPA
4					
5					
6					
7					

VERSION 3

PRINTED 10/31/2017 4:44 PM

nationalgrid

MERRIMACK VALLEY RELIABILITY PROJECT

PLAN AND PROFILE DRAWINGS
SCOBIE POND TO TEWKSBURY
LINE Y151 115KV

PREPARED BY	MKB	02/05/16
REVIEWED BY	FTX	02/05/16
APPROVED BY	NPA	02/05/16
SCALE	–	
SHEET	1 OF 1	
INDEX	400298	

PRINTED COPIES ARE NOT DOCUMENT CONTROLLED. FOR THE LATEST AUTHORIZED VERSION PLEASE REFER TO THE ENGINEERING DEPARTMENT DOCUMENTS CABINET IN DOCUMENTUM

INCHES ON ORIGINAL

400298-C-R-312

CONFIDENTIALITY STATEMENT: THIS DOCUMENT CONTAINS CONFIDENTIAL AND PROPRIETARY INFORMATION OF NATIONAL GRID. IT IS TO BE USED BY AUTHORIZED CONTRACTORS FOR NATIONAL GRID SOLELY IN CONNECTION WITH THE SPECIFIC PROJECT FOR WHICH IT HAS BEEN TRANSMITTED. ANY OTHER USE, ITS TRANSMITTAL TO THIRD PARTIES, OR ITS REPRODUCTION WITHOUT PRIOR EXPRESS WRITTEN AUTHORIZATION OF NATIONAL GRID IS STRICTLY PROHIBITED.

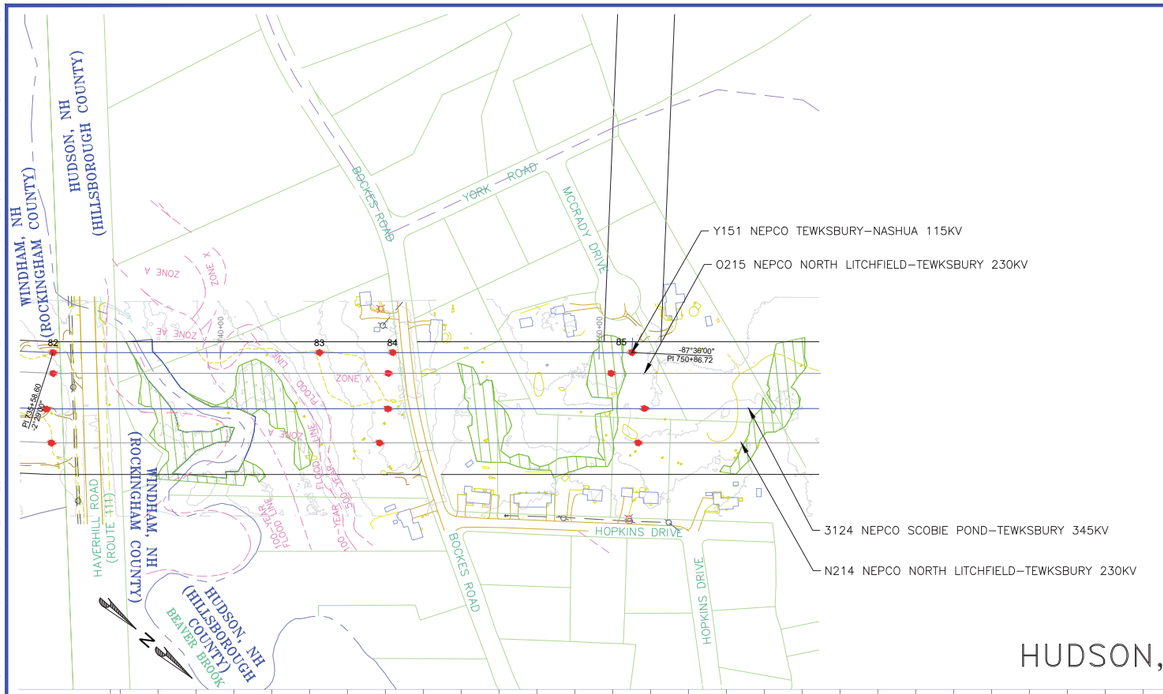

HUDSON, NEW HAMPSHIRE

0 200' 400'
HORIZONTAL SCALE 1:200'

0 20' 40' 80'
VERTICAL SCALE 1:40'

PROPOSED 144 COUNT FIBER OPGW
PROPOSED DRAKE 795 KCMIL 26/7 ACSS HS285

OPGW SHOWN AT NESC HEAVY 4500 LBS, 60°F MAX SAG
CONDUCTOR SHOWN AT NESC HEAVY 8000 LBS, 392°F MAX SAG

VER	DATE	VERSION DESCRIPTION	PREPARED BY	REVIEWED BY	APPROVED BY
1	05/22/15	NHSEC PERMIT FILING	JLM	FTX	NPA
2	02/05/16	REVISED NHSEC FILING	MKB	FTX	NPA
3	10/31/17	AS-BUILT AND ISSUED FOR NHSEC RECORD	DRD	GC	NPA
4					
5					
6					
7					

VERSION 3

nationalgrid

MERRIMACK VALLEY RELIABILITY PROJECT

PLAN AND PROFILE DRAWINGS
SCOBIE POND TO TEWKSBURY
LINE Y151 115KV

PREPARED BY	MKB	02/05/16
REVIEWED BY	FTX	02/05/16
APPROVED BY	NPA	02/05/16
SCALE	–	
SHEET	1 OF 1	
INDEX	400298	

PRINTED 10/31/2017 4:44 PM

PRINTED COPIES ARE NOT DOCUMENT CONTROLLED. FOR THE LATEST AUTHORIZED VERSION PLEASE REFER TO THE ENGINEERING DEPARTMENT DOCUMENTS CABINET IN DOCUMENTUM

INCHES ON ORIGINAL

400298-C-R-706

CONFIDENTIALITY STATEMENT: THIS DOCUMENT CONTAINS CONFIDENTIAL AND PROPRIETARY INFORMATION OF NATIONAL GRID. IT IS TO BE USED BY AUTHORIZED CONTRACTORS FOR NATIONAL GRID SOLELY IN CONNECTION WITH THE SPECIFIC PROJECT FOR WHICH IT HAS BEEN TRANSMITTED. ANY OTHER USE, ITS TRANSMITTAL TO THIRD PARTIES, OR ITS REPRODUCTION WITHOUT PRIOR EXPRESS WRITTEN AUTHORIZATION OF NATIONAL GRID IS STRICTLY PROHIBITED.

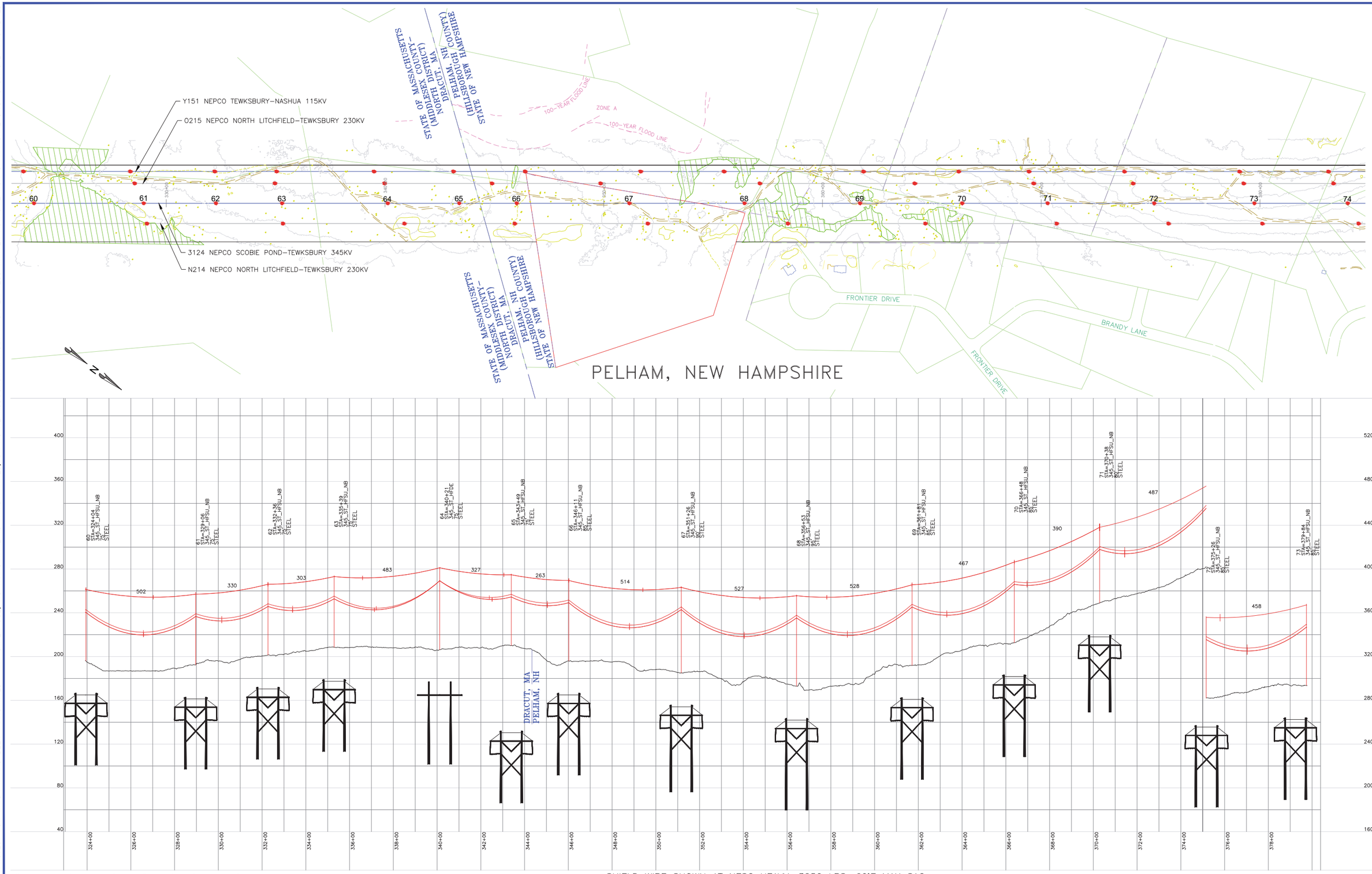

PROPOSED 3/8"–7 STRAND EHS AND 48 COUNT FIBER OPGW
PROPOSED BUNDLED FALCON 1590 KCMIL 54/19 ACSR

SHIELD WIRE SHOWN AT NESC HEAVY, 3250 LBS, 60°F MAX SAG
OPGW SHOWN AT NESC HEAVY, 4000 LBS, 60°F MAX SAG
CONDUCTOR SHOWN AT NESC HEAVY, 10000 LBS 284°F MAX SAG

VER	DATE	VERSION DESCRIPTION	PREPARED BY	REVIEWED BY	APPROVED BY
1	05/22/15	NHSEC PERMIT FILING	JLM	FTX	NPA
2	02/05/16	REVISED NHSEC FILING		MKB	FTX NPA
3	10/31/17	AS-BUILT AND ISSUED FOR NHSEC RECORD		DRD	GC NPA
4					
5					
6					
7					

VERSION 3

nationalgrid

PREPARED BY	MKB	02/05/16
REVIEWED BY	FTX	02/05/16
APPROVED BY	NPA	02/05/16
SCALE	–	
SHEET	1 OF 1	
INDEX	400298	

MERRIMACK VALLEY RELIABILITY PROJECT

PLAN AND PROFILE DRAWINGS
SCOBIE POND TO TEWKSBURY
LINE 3124 345KV

PRINTED 12/15/2017 10:46 AM

PRINTED COPIES ARE NOT DOCUMENT CONTROLLED. FOR THE LATEST AUTHORIZED VERSION PLEASE REFER TO THE ENGINEERING DEPARTMENT DOCUMENTS CABINET IN DOCUMENTUM

INCHES ON ORIGINAL

400298-C-R-707

CONFIDENTIALITY STATEMENT: THIS DOCUMENT CONTAINS CONFIDENTIAL AND PROPRIETARY INFORMATION OF NATIONAL GRID. IT IS TO BE USED BY AUTHORIZED CONTRACTORS FOR NATIONAL GRID SOLELY IN CONNECTION WITH THE SPECIFIC PROJECT FOR WHICH IT HAS BEEN TRANSMITTED. ANY OTHER USE, ITS TRANSMITTAL TO THIRD PARTIES, OR ITS REPRODUCTION WITHOUT PRIOR EXPRESS WRITTEN AUTHORIZATION OF NATIONAL GRID IS STRICTLY PROHIBITED.

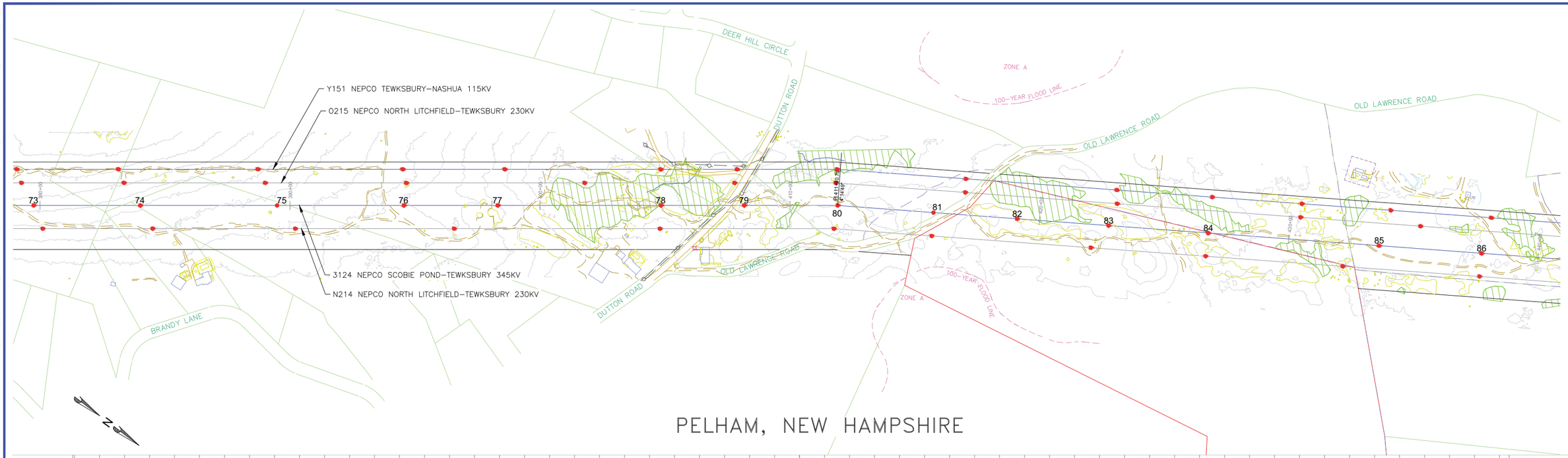

PELHAM, NEW HAMPSHIRE

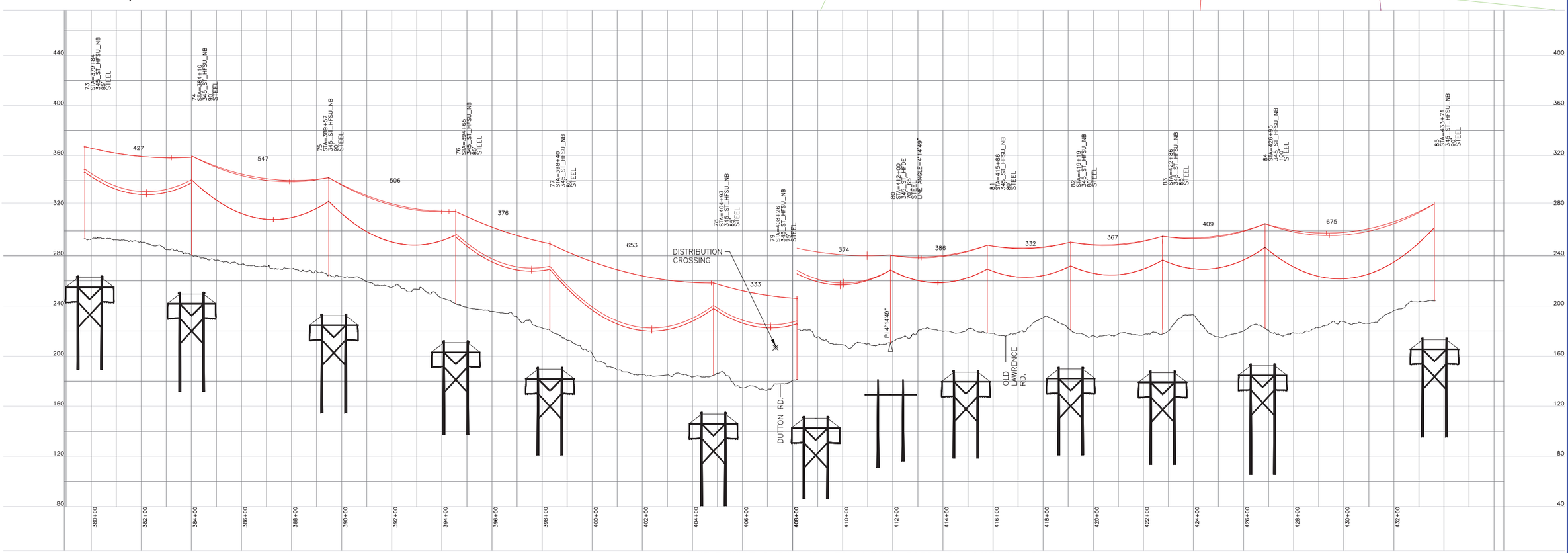

0 200' 400'
HORIZONTAL SCALE 1:200'

0 20' 40' 80'
VERTICAL SCALE 1:40'

PROPOSED 3/8"–7 STRAND EHS AND 48 COUNT FIBER OPGW
PROPOSED BUNDLED FALCON 1590 KCMIL 54/19 ACSR

SHIELD WIRE SHOWN AT NESC HEAVY, 3250 LBS, 60°F MAX SAG
OPGW SHOWN AT NESC HEAVY, 4000 LBS, 60°F MAX SAG
CONDUCTOR SHOWN AT NESC HEAVY, 10000 LBS 284°F MAX SAG

VER	DATE	VERSION DESCRIPTION	PREPARED/REVIEWED/APPROVED
1	05/22/15	NHSEC PERMIT FILING	JLM FTX NPA
2	02/05/16	REVISED NHSEC FILING	MKB FTX NPA
3	10/31/17	AS–BUILT AND ISSUED FOR NHSEC RECORD	DRD GC NPA
4			
5			
6			
7			

VERSION 3

nationalgrid

PREPARED BY	MKB	02/05/16
REVIEWED BY	FTX	02/05/16
APPROVED BY	NPA	02/05/16
SCALE	–	
SHEET	1 OF 1	
INDEX	400298	

MERRIMACK VALLEY RELIABILITY PROJECT

PLAN AND PROFILE DRAWINGS
SCOBIE POND TO TEWKSBURY
LINE 3124 345KV

PRINTED 12/15/2017 11:32 AM

PRINTED COPIES ARE NOT DOCUMENT CONTROLLED. FOR THE LATEST AUTHORIZED VERSION PLEASE REFER TO THE ENGINEERING DEPARTMENT DOCUMENTS CABINET IN DOCUMENTUM

INCHES ON ORIGINAL

CONFIDENTIALITY STATEMENT: THIS DOCUMENT CONTAINS CONFIDENTIAL AND PROPRIETARY INFORMATION OF NATIONAL GRID. IT IS TO BE USED BY AUTHORIZED CONTRACTORS FOR NATIONAL GRID SOLELY IN CONNECTION WITH THE SPECIFIC PROJECT FOR WHICH IT HAS BEEN TRANSMITTED. ANY OTHER USE, ITS TRANSMITTAL TO THIRD PARTIES, OR ITS REPRODUCTION WITHOUT PRIOR EXPRESS WRITTEN AUTHORIZATION OF NATIONAL GRID IS STRICTLY PROHIBITED.

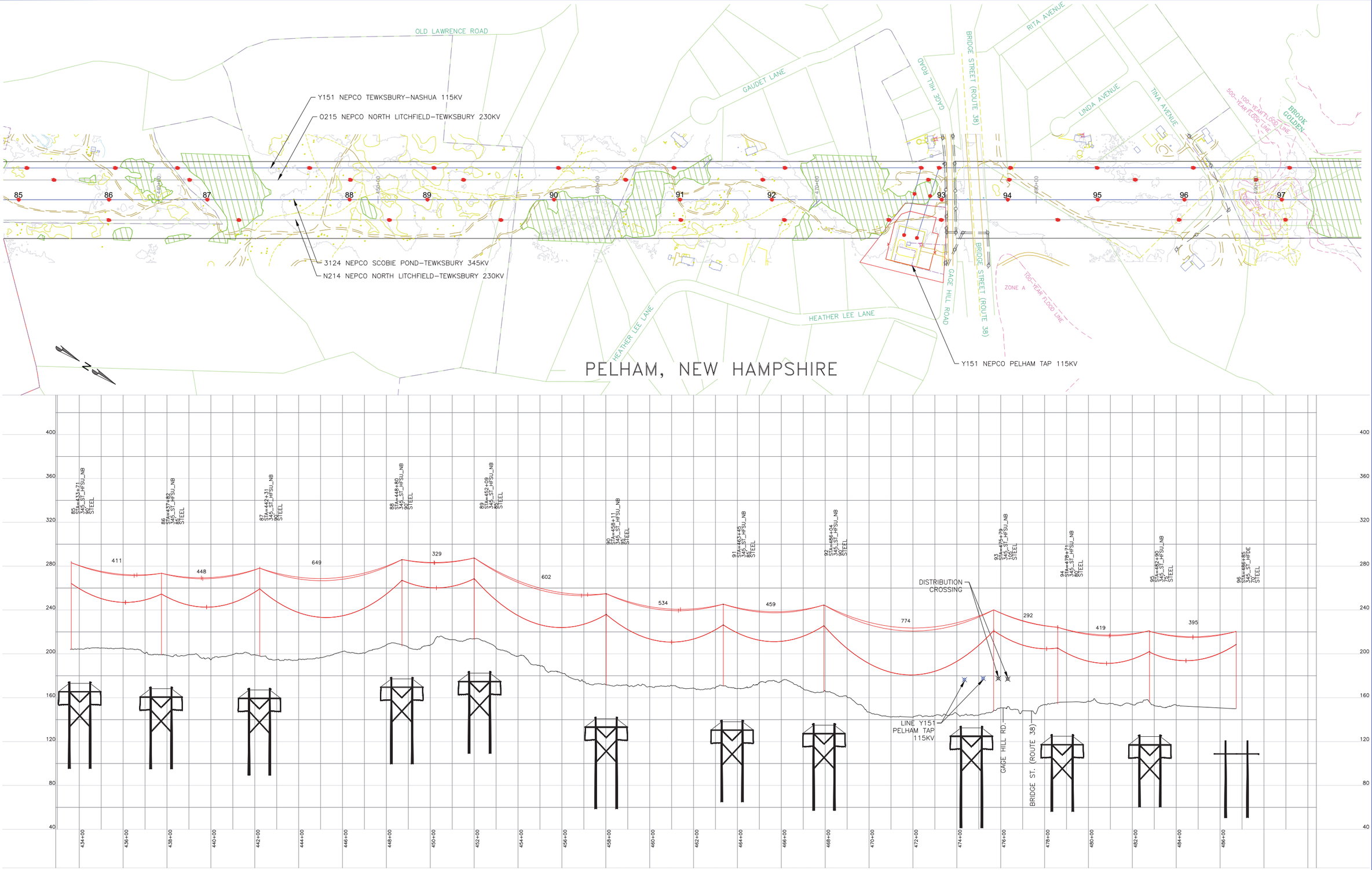

PROPOSED 3/8"–7 STRAND EHS AND 48 COUNT FIBER OPGW
PROPOSED BUNDLED FALCON 1590 KCMIL 54/19 ACSR

SHIELD WIRE SHOWN AT NESC HEAVY, 3250 LBS, 60°F MAX SAG
OPGW SHOWN AT NESC HEAVY, 4000 LBS, 60°F MAX SAG
CONDUCTOR SHOWN AT NESC HEAVY, 10000 LBS 284°F MAX SAG

VER	DATE	VERSION DESCRIPTION	PREPARED BY	REVIEWED BY	APPROVED BY
1	05/22/15	NHSEC PERMIT FILING	JLM	FTX	NPA
2	10/31/17	AS–BUILT AND ISSUED FOR NHSEC RECORD	DRD	GC	NPA
3					
4					
5					
6					
7					

VERSION 2

nationalgrid

PREPARED BY	MKB	02/05/16
REVIEWED BY	FTX	02/05/16
APPROVED BY	NPA	02/05/16
SCALE	–	
SHEET	1 OF 1	
INDEX	400298	

MERRIMACK VALLEY RELIABILITY PROJECT

PLAN AND PROFILE DRAWINGS
SCOBIE POND TO TEWKSBURY
LINE 3124 345KV

PRINTED 12/15/2017 11:30 AM

PRINTED COPIES ARE NOT DOCUMENT CONTROLLED. FOR THE LATEST AUTHORIZED VERSION PLEASE REFER TO THE ENGINEERING DEPARTMENT DOCUMENTS CABINET IN DOCUMENTUM

INCHES ON ORIGINAL

400298-C-R-709

CONFIDENTIALITY STATEMENT: THIS DOCUMENT CONTAINS CONFIDENTIAL AND PROPRIETARY INFORMATION OF NATIONAL GRID. IT IS TO BE USED BY AUTHORIZED CONTRACTORS FOR NATIONAL GRID SOLELY IN CONNECTION WITH THE SPECIFIC PROJECT FOR WHICH IT HAS BEEN TRANSMITTED. ANY OTHER USE, ITS TRANSMITTAL TO THIRD PARTIES, OR ITS REPRODUCTION WITHOUT PRIOR EXPRESS WRITTEN AUTHORIZATION OF NATIONAL GRID IS STRICTLY PROHIBITED.

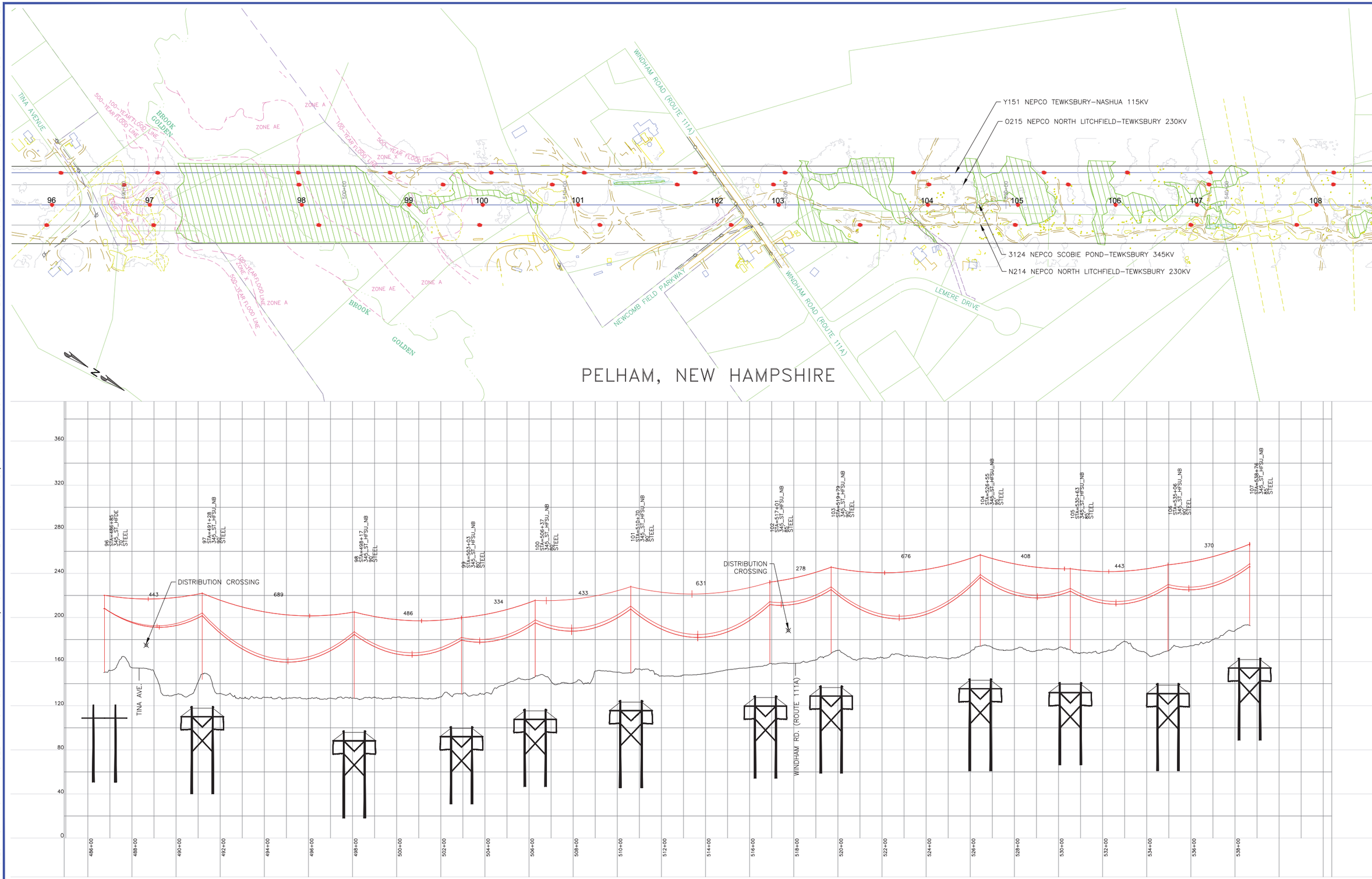

0 200' 400'
HORIZONTAL SCALE 1:200'

0 20' 40' 80'
VERTICAL SCALE 1:40'

PROPOSED 3/8"–7 STRAND EHS AND 48 COUNT FIBER OPGW
PROPOSED BUNDLED FALCON 1590 KCMIL 54/19 ACSR

SHIELD WIRE SHOWN AT NESC HEAVY, 3250 LBS, 60°F MAX SAG
OPGW SHOWN AT NESC HEAVY, 4000 LBS, 60°F MAX SAG
CONDUCTOR SHOWN AT NESC HEAVY, 10000 LBS 284°F MAX SAG

VER	DATE	VERSION DESCRIPTION	PREPARED BY	REVIEWED BY	APPROVED BY
1	05/22/15	NHSEC PERMIT FILING	JLM	FTX	NPA
2	02/05/16	REVISED NHSEC FILING	MKB	FTX	NPA
3	10/31/17	AS-BUILT AND ISSUED FOR NHSEC RECORD	DRD	GC	NPA
4					
5					
6					
7					

VERSION 3

nationalgrid

MERRIMACK VALLEY RELIABILITY PROJECT

PLAN AND PROFILE DRAWINGS
SCOBIE POND TO TEWKSBURY
LINE 3124 345KV

PREPARED BY	MKB	02/05/16
REVIEWED BY	FTX	02/05/16
APPROVED BY	NPA	02/05/16
SCALE	–	
SHEET	1 OF 1	
INDEX	400298	

PRINTED 12/13/2017 5:12 AM

PRINTED COPIES ARE NOT DOCUMENT CONTROLLED. FOR THE LATEST AUTHORIZED VERSION PLEASE REFER TO THE ENGINEERING DEPARTMENT DOCUMENTS CABINET IN DOCUMENTUM

INCHES ON ORIGINAL

CONFIDENTIALITY STATEMENT: THIS DOCUMENT CONTAINS CONFIDENTIAL AND PROPRIETARY INFORMATION OF NATIONAL GRID. IT IS TO BE USED BY AUTHORIZED CONTRACTORS FOR NATIONAL GRID SOLELY IN CONNECTION WITH THE SPECIFIC PROJECT FOR WHICH IT HAS BEEN TRANSMITTED. ANY OTHER USE, ITS TRANSMITTAL TO THIRD PARTIES, OR ITS REPRODUCTION WITHOUT PRIOR EXPRESS WRITTEN AUTHORIZATION OF NATIONAL GRID IS STRICTLY PROHIBITED.

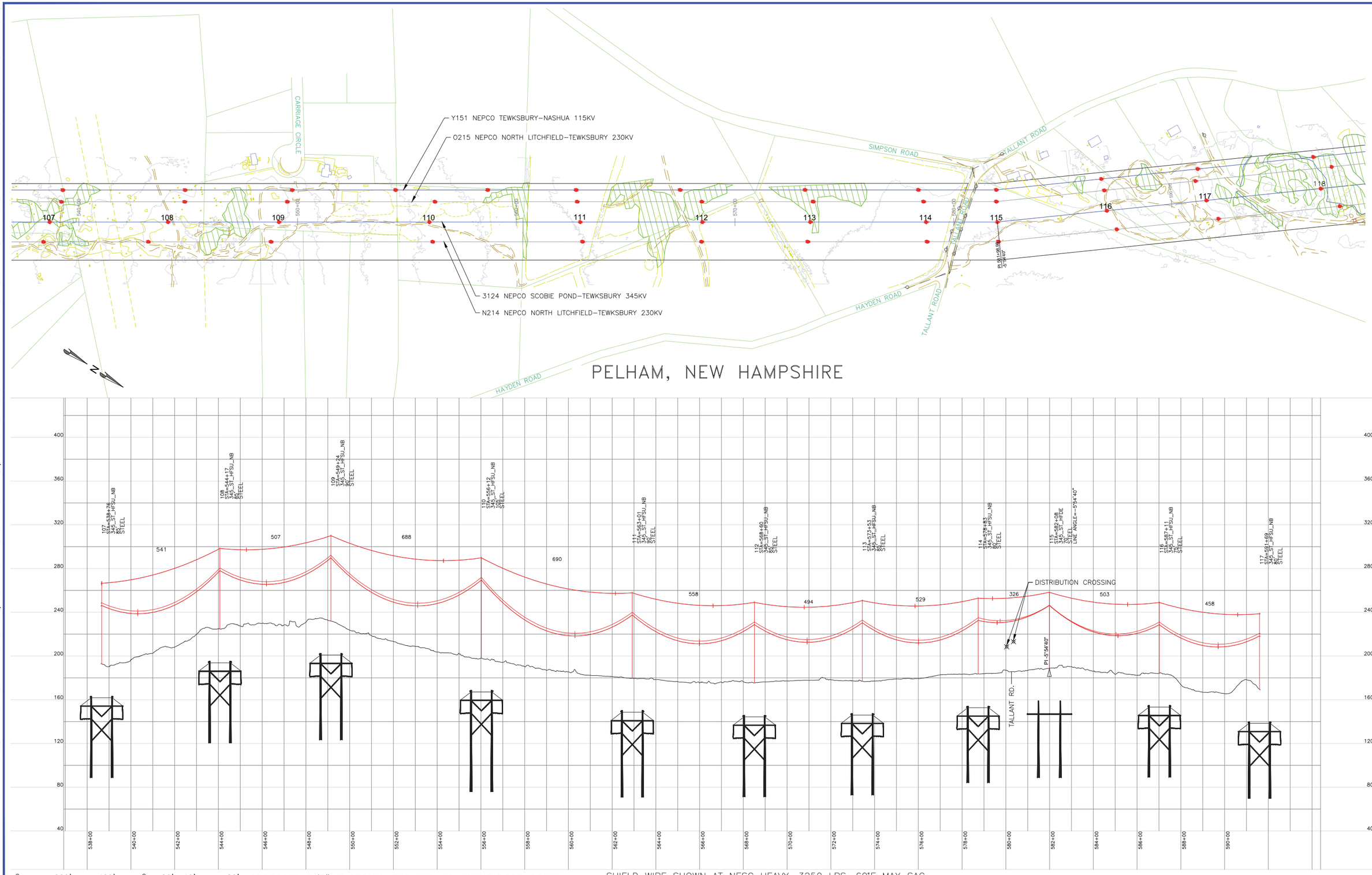

0 200' 400'
HORIZONTAL SCALE 1:200'

0 20' 40' 80'
VERTICAL SCALE 1:40'

PROPOSED 3/8"–7 STRAND EHS AND 48 COUNT FIBER OPGW
PROPOSED BUNDLED FALCON 1590 KCMIL 54/19 ACSR

SHIELD WIRE SHOWN AT NESC HEAVY, 3250 LBS, 60°F MAX SAG
OPGW SHOWN AT NESC HEAVY, 4000 LBS, 60°F MAX SAG
CONDUCTOR SHOWN AT NESC HEAVY, 10000 LBS 284°F MAX SAG

VER	DATE	VERSION DESCRIPTION	PREPARED BY	REVIEWED BY	APPROVED BY
1	05/22/15	NHSEC PERMIT FILING	JLM	FTX	NPA
2	10/31/17	AS–BUILT AND ISSUED FOR NHSEC RECORD	DRD	GC	NPA
3					
4					
5					
6					
7					

VERSION 2

nationalgrid

MERRIMACK VALLEY RELIABILITY PROJECT

PLAN AND PROFILE DRAWINGS
SCOBIE POND TO TEWKSBURY
LINE 3124 345KV

PREPARED BY	MKB	02/05/16
REVIEWED BY	FTX	02/05/16
APPROVED BY	NPA	02/05/16
SCALE	–	
SHEET	1 OF 1	
INDEX	400298	

PRINTED 12/13/2017 5:12 AM

PRINTED COPIES ARE NOT DOCUMENT CONTROLLED. FOR THE LATEST AUTHORIZED VERSION PLEASE REFER TO THE ENGINEERING DEPARTMENT DOCUMENTS CABINET IN DOCUMENTUM

INCHES ON ORIGINAL

CONFIDENTIALITY STATEMENT: THIS DOCUMENT CONTAINS CONFIDENTIAL AND PROPRIETARY INFORMATION OF NATIONAL GRID. IT IS TO BE USED BY AUTHORIZED CONTRACTORS FOR NATIONAL GRID SOLELY IN CONNECTION WITH THE SPECIFIC PROJECT FOR WHICH IT HAS BEEN TRANSMITTED. ANY OTHER USE, ITS TRANSMITTAL TO THIRD PARTIES, OR ITS REPRODUCTION WITHOUT PRIOR EXPRESS WRITTEN AUTHORIZATION OF NATIONAL GRID IS STRICTLY PROHIBITED.

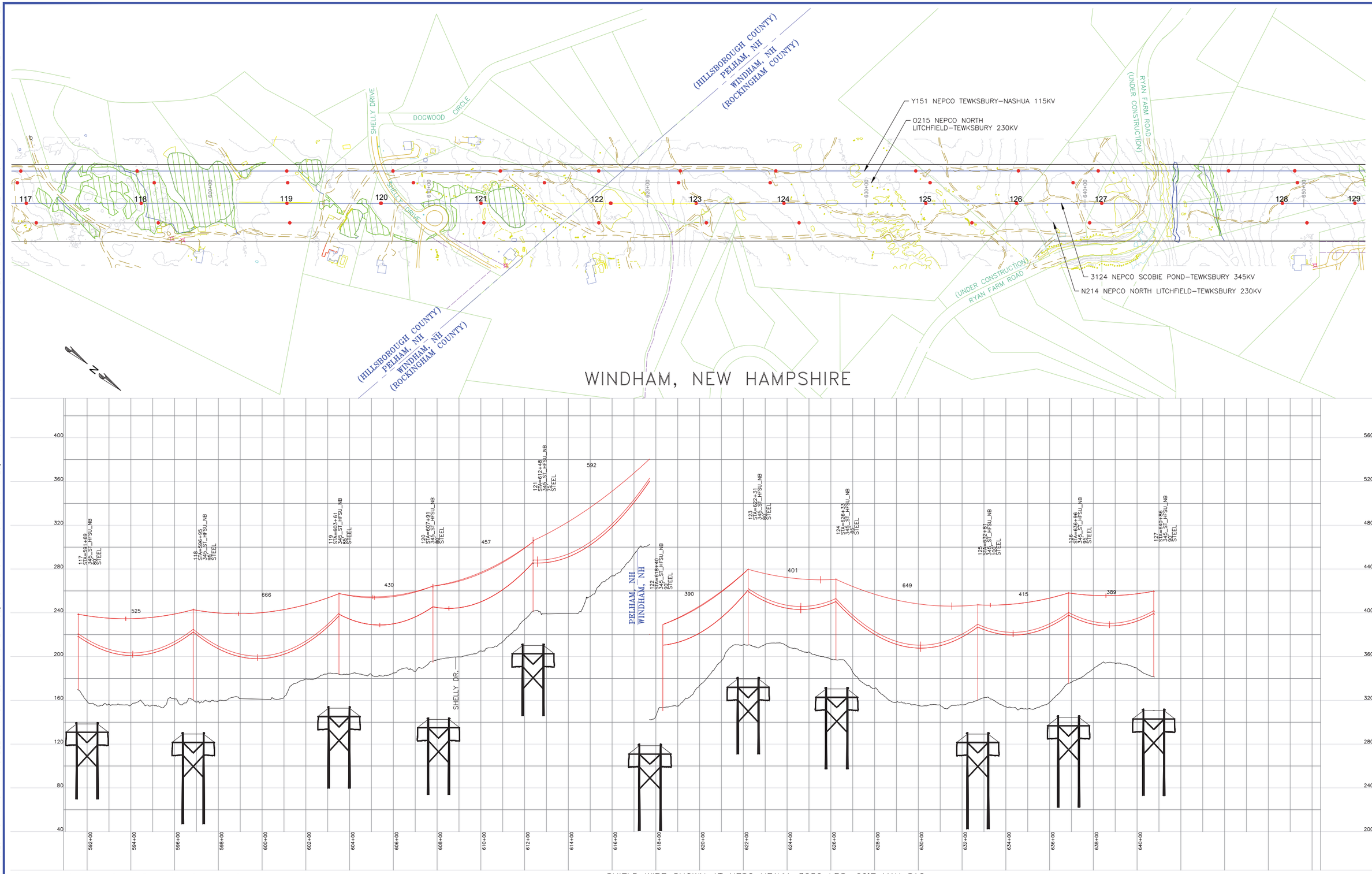

0 200' 400'
HORIZONTAL SCALE 1:200'

0 20' 40' 80'
VERTICAL SCALE 1:40'

PROPOSED 3/8"–7 STRAND EHS AND 48 COUNT FIBER OPGW
PROPOSED BUNDLED FALCON 1590 KCMIL 54/19 ACSR

SHIELD WIRE SHOWN AT NESC HEAVY, 3250 LBS, 60°F MAX SAG
OPGW SHOWN AT NESC HEAVY, 4000 LBS, 60°F MAX SAG
CONDUCTOR SHOWN AT NESC HEAVY, 10000 LBS 284°F MAX SAG

VER	DATE	VERSION DESCRIPTION	PREPARED BY	REVIEWED BY	APPROVED BY
1	05/22/15	NHSEC PERMIT FILING	JLM	FTX	NPA
2	02/05/16	REVISED NHSEC FILING	MKB	FTX	NPA
3	10/31/17	AS-BUILT AND ISSUED FOR NHSEC RECORD	DRD	GC	NPA
4					
5					
6					
7					

VERSION 3

nationalgrid

MERRIMACK VALLEY RELIABILITY PROJECT

PLAN AND PROFILE DRAWINGS
SCOBIE POND TO TEWKSBURY
LINE 3124 345KV

PREPARED BY	MKB	02/05/16
REVIEWED BY	FTX	02/05/16
APPROVED BY	NPA	02/05/16
SCALE	–	
SHEET	1 OF 1	
INDEX	400298	

PRINTED 12/13/2017 5:13 AM

PRINTED COPIES ARE NOT DOCUMENT CONTROLLED. FOR THE LATEST AUTHORIZED VERSION PLEASE REFER TO THE ENGINEERING DEPARTMENT DOCUMENTS CABINET IN DOCUMENTUM

INCHES ON ORIGINAL

400298-C-R-712

CONFIDENTIALITY STATEMENT: THIS DOCUMENT CONTAINS CONFIDENTIAL AND PROPRIETARY INFORMATION OF NATIONAL GRID. IT IS TO BE USED BY AUTHORIZED CONTRACTORS FOR NATIONAL GRID SOLELY IN CONNECTION WITH THE SPECIFIC PROJECT FOR WHICH IT HAS BEEN TRANSMITTED. ANY OTHER USE, ITS TRANSMITTAL TO THIRD PARTIES, OR ITS REPRODUCTION WITHOUT PRIOR EXPRESS WRITTEN AUTHORIZATION OF NATIONAL GRID IS STRICTLY PROHIBITED.

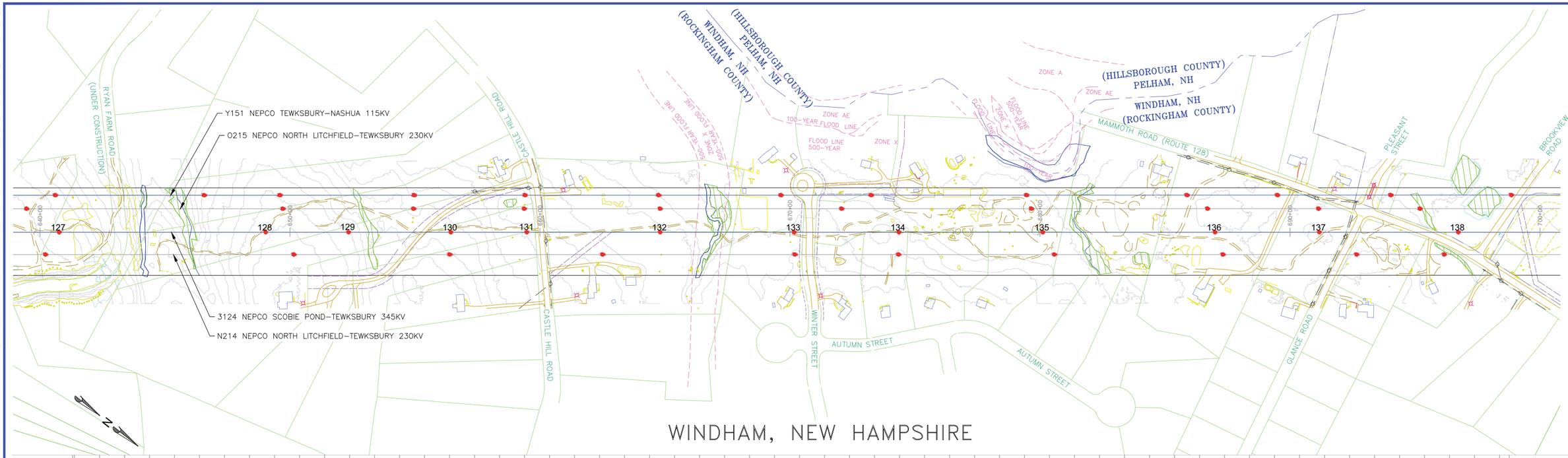

WINDHAM, NEW HAMPSHIRE

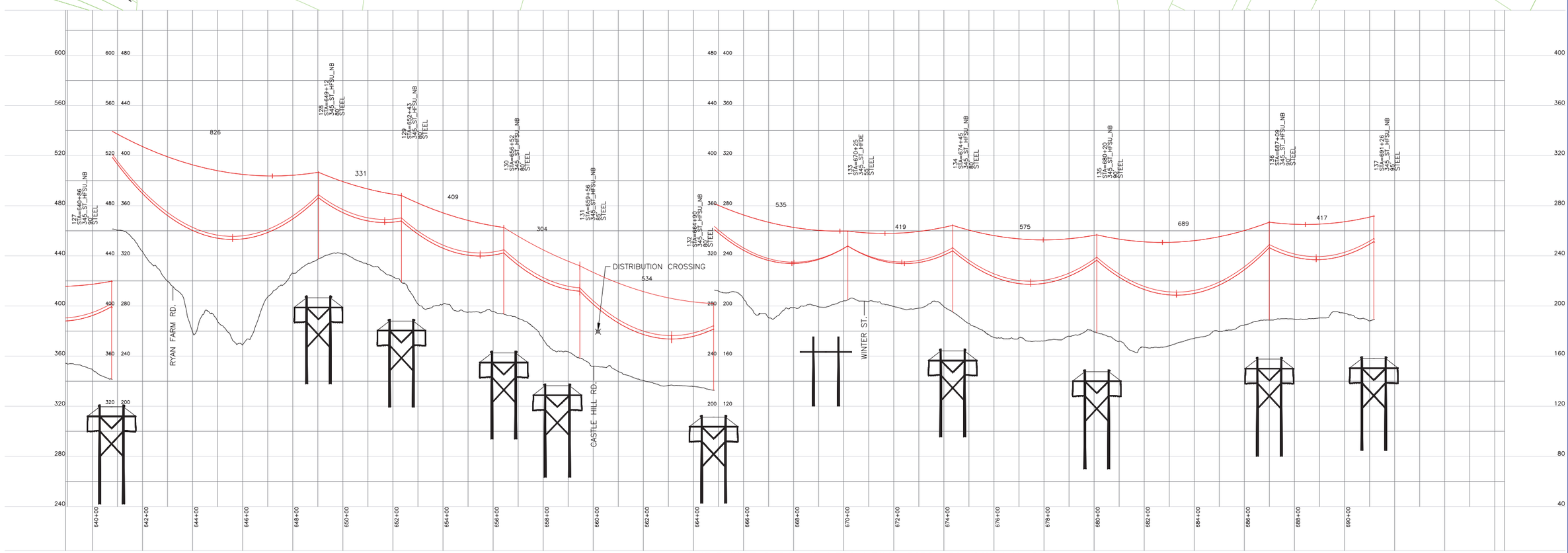

0 200' 400' HORIZONTAL SCALE 1:200'

0 20' 40' 80' VERTICAL SCALE 1:40'

PROPOSED 3/8"–7 STRAND EHS AND 48 COUNT FIBER OPGW
PROPOSED BUNDLED FALCON 1590 KCMIL 54/19 ACSR

SHIELD WIRE SHOWN AT NESC HEAVY, 3250 LBS, 60°F MAX SAG
OPGW SHOWN AT NESC HEAVY, 4000 LBS, 60°F MAX SAG
CONDUCTOR SHOWN AT NESC HEAVY, 10000 LBS 284°F MAX SAG

VER	DATE	VERSION DESCRIPTION	PREPARED BY	REVIEWED BY	APPROVED BY
1	05/22/15	NHSEC PERMIT FILING	JLM	FTX	NPA
2	02/05/16	REVISED NHSEC FILING	MKB	FTX	NPA
3	10/31/17	AS-BUILT AND ISSUED FOR NHSEC RECORD	DRD	GC	NPA
4					
5					
6					
7					

VERSION 3

nationalgrid

MERRIMACK VALLEY RELIABILITY PROJECT

PLAN AND PROFILE DRAWINGS
SCOBIE POND TO TEWKSBURY
LINE 3124 345KV

PREPARED BY	MKB	02/05/16
REVIEWED BY	FTX	02/05/16
APPROVED BY	NPA	02/05/16
SCALE	–	
SHEET	1 OF 1	
INDEX	400298	

PRINTED 12/13/2017 5:13 AM

PRINTED COPIES ARE NOT DOCUMENT CONTROLLED. FOR THE LATEST AUTHORIZED VERSION PLEASE REFER TO THE ENGINEERING DEPARTMENT DOCUMENTS CABINET IN DOCUMENTUM

INCHES ON ORIGINAL

400298-C-R-713

CONFIDENTIALITY STATEMENT: THIS DOCUMENT CONTAINS CONFIDENTIAL AND PROPRIETARY INFORMATION OF NATIONAL GRID. IT IS TO BE USED BY AUTHORIZED CONTRACTORS FOR NATIONAL GRID SOLELY IN CONNECTION WITH THE SPECIFIC PROJECT FOR WHICH IT HAS BEEN TRANSMITTED. ANY OTHER USE, ITS TRANSMITTAL TO THIRD PARTIES, OR ITS REPRODUCTION WITHOUT PRIOR EXPRESS WRITTEN AUTHORIZATION OF NATIONAL GRID IS STRICTLY PROHIBITED.

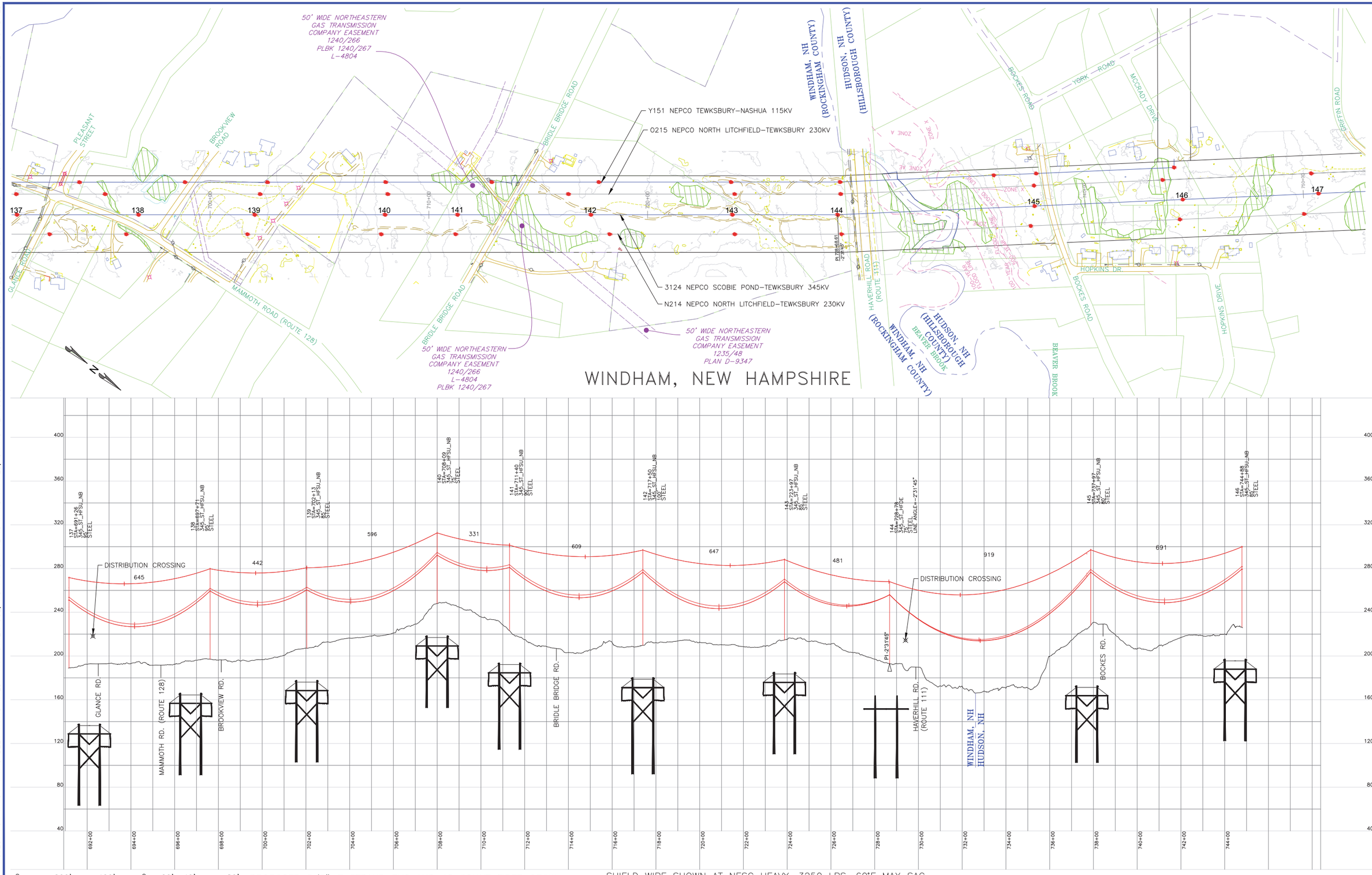

PROPOSED 3/8"-7 STRAND EHS AND 48 COUNT FIBER OPGW
PROPOSED BUNDLED FALCON 1590 KCMIL 54/19 ACSR

SHIELD WIRE SHOWN AT NESC HEAVY, 3250 LBS, 60°F MAX SAG
OPGW SHOWN AT NESC HEAVY, 4000 LBS, 60°F MAX SAG
CONDUCTOR SHOWN AT NESC HEAVY, 10000 LBS 284°F MAX SAG

VER	DATE	VERSION DESCRIPTION
1	05/22/15	NHSEC PERMIT FILING
2	10/31/17	AS-BUILT AND ISSUED FOR NHSEC RECORD
3		
4		
5		
6		
7		

VERSION 2

PREPARED BY (SIGNATURE) (PRINT NAME) JLM FTX NPA
REVIEWED BY DRD GC NPA

nationalgrid

MERRIMACK VALLEY RELIABILITY PROJECT

PLAN AND PROFILE DRAWINGS
SCOBIE POND TO TEWKSBURY
LINE 3124 345KV

PREPARED BY	MKB	02/05/16
REVIEWED BY	FTX	02/05/16
APPROVED BY	NPA	02/05/16
SCALE	–	
SHEET	1 OF 1	
INDEX	400298	

PRINTED 12/13/2017 5:13 AM

PRINTED COPIES ARE NOT DOCUMENT CONTROLLED. FOR THE LATEST AUTHORIZED VERSION PLEASE REFER TO THE ENGINEERING DEPARTMENT DOCUMENTS CABINET IN DOCUMENTUM

INCHES ON ORIGINAL

CONFIDENTIALITY STATEMENT: THIS DOCUMENT CONTAINS CONFIDENTIAL AND PROPRIETARY INFORMATION OF NATIONAL GRID. IT IS TO BE USED BY AUTHORIZED CONTRACTORS FOR NATIONAL GRID SOLELY IN CONNECTION WITH THE SPECIFIC PROJECT FOR WHICH IT HAS BEEN TRANSMITTED. ANY OTHER USE, ITS TRANSMITTAL TO THIRD PARTIES, OR ITS REPRODUCTION WITHOUT PRIOR EXPRESS WRITTEN AUTHORIZATION OF NATIONAL GRID IS STRICTLY PROHIBITED.

400298-C-R-714

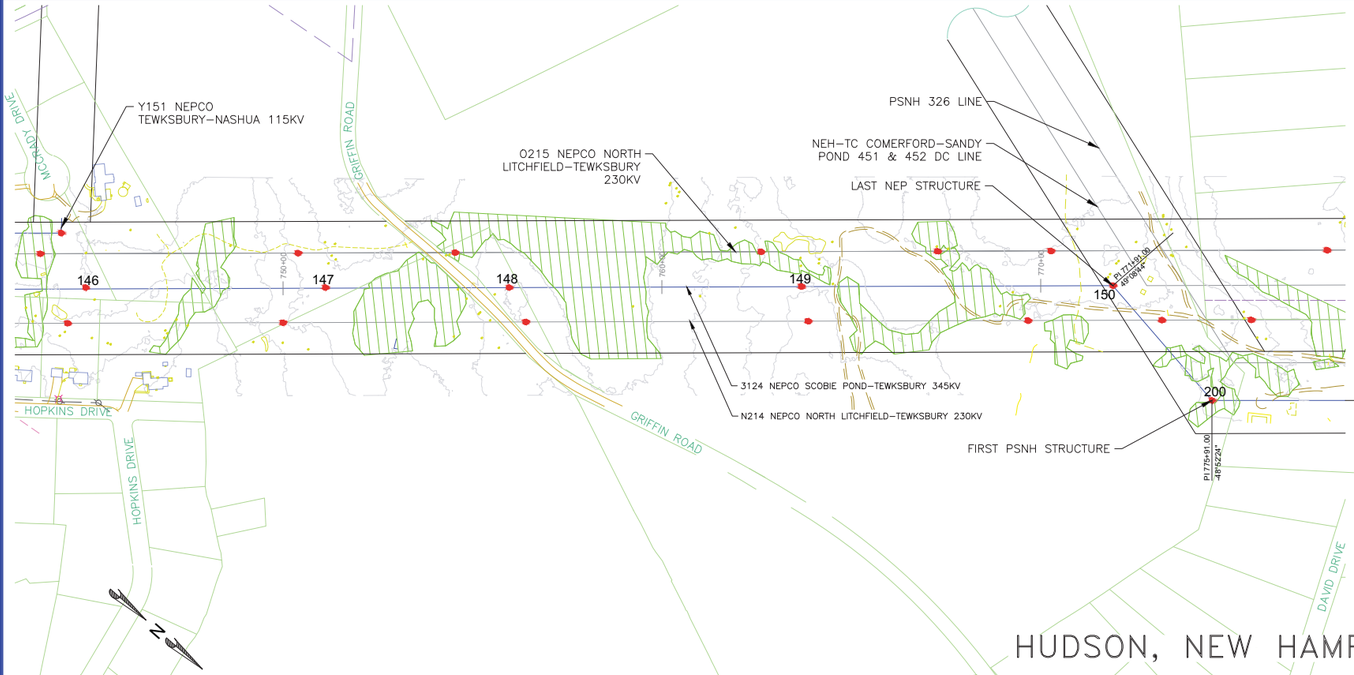

HUDSON, NEW HAMPSHIRE

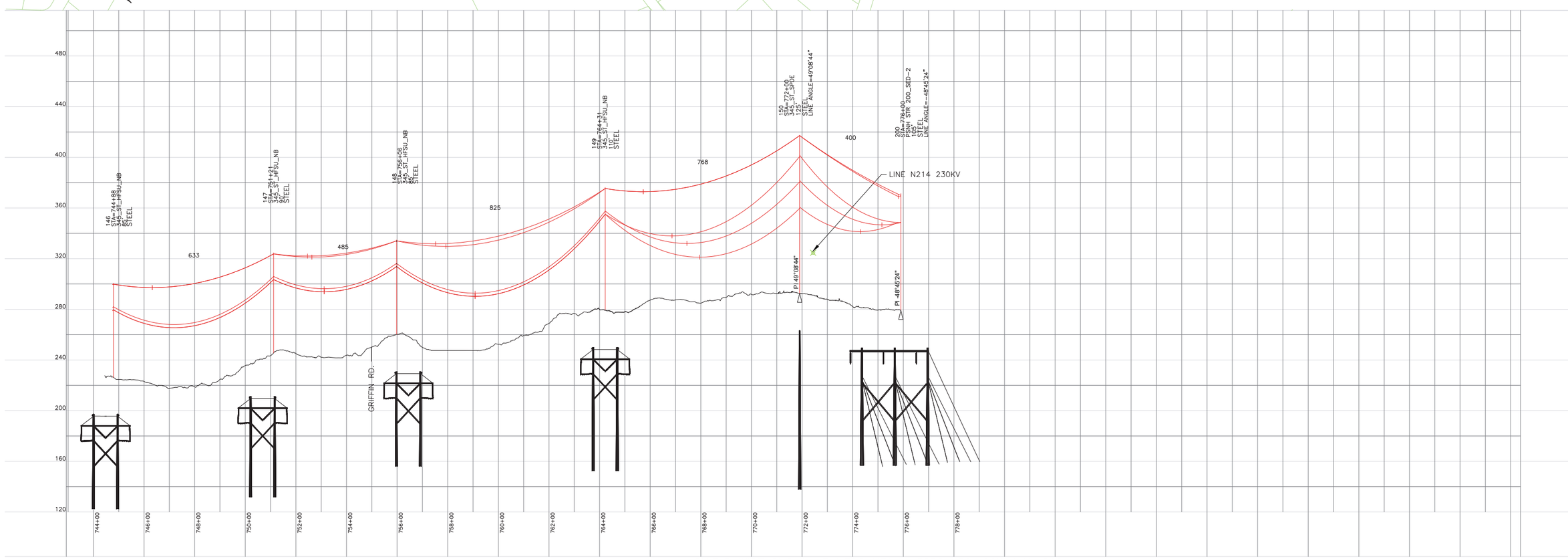

0 200' 400'
HORIZONTAL SCALE 1:200'

0 20' 40' 80'
VERTICAL SCALE 1:40'

PROPOSED 3/8"–7 STRAND EHS AND 48 COUNT FIBER OPGW
PROPOSED BUNDLED FALCON 1590 KCMIL 54/19 ACSR

SHIELD WIRE SHOWN AT NESC HEAVY, 3250 LBS, 60°F MAX SAG
OPGW SHOWN AT NESC HEAVY, 4000 LBS, 60°F MAX SAG
CONDUCTOR SHOWN AT NESC HEAVY, 10000 LBS 284°F MAX SAG

VER	DATE	VERSION DESCRIPTION	PREPARED/REVIEWED/APPROVED
1	05/22/15	NHSEC PERMIT FILING	JLM FTX NPA
2	10/29/15	RELOCATED 3124 STRUCTURE 148	KMM FTX NPA
3	10/31/17	AS-BUILT AND ISSUED FOR NHSEC RECORD	DRD GC NPA
4			
5			
6			
7			

VERSION 3

nationalgrid

PREPARED BY	MKB	02/05/16
REVIEWED BY	FTX	02/05/16
APPROVED BY	NPA	02/05/16
SCALE	–	
SHEET	1 OF 1	
INDEX	400298	

MERRIMACK VALLEY RELIABILITY PROJECT

PLAN AND PROFILE DRAWINGS
SCOBIE POND TO TEWKSBURY
LINE 3124 345KV

PRINTED 12/13/2017 5:14 AM

PRINTED COPIES ARE NOT DOCUMENT CONTROLLED. FOR THE LATEST AUTHORIZED VERSION PLEASE REFER TO THE ENGINEERING DEPARTMENT DOCUMENTS CABINET IN DOCUMENTUM

INCHES ON ORIGINAL

CONFIDENTIALITY STATEMENT: THIS DOCUMENT CONTAINS CONFIDENTIAL AND PROPRIETARY INFORMATION OF NATIONAL GRID SOLELY IN CONNECTION WITH THE SPECIFIC PROJECT FOR WHICH IT HAS BEEN TRANSMITTED. ANY OTHER USE, ITS TRANSMITTAL TO THIRD PARTIES, OR ITS REPRODUCTION WITHOUT PRIOR EXPRESS WRITTEN AUTHORIZATION OF NATIONAL GRID IS STRICTLY PROHIBITED.

NOTES:
1. REFER TO WORK LIST FOR POLE HEIGHT.
2. SEE SPECIFICATION SP.06.01.301.101 FOR STRUCTURE GROUNDING DETAILS.
3. SEE SPECIFICATION SP.06.01.301.201 FOR STRUCTURE NUMBERING AND WARNING SIGNS REQUIRED FOR ALL STRUCTURES.
4. STEEL POLE MANUFACTURER DRAWINGS TO SUPERCEDE CONCEPT DRAWINGS AND WILL BE ISSUED FOR CONSTRUCTION AS SOON AS THEY ARE AVAILABLE.

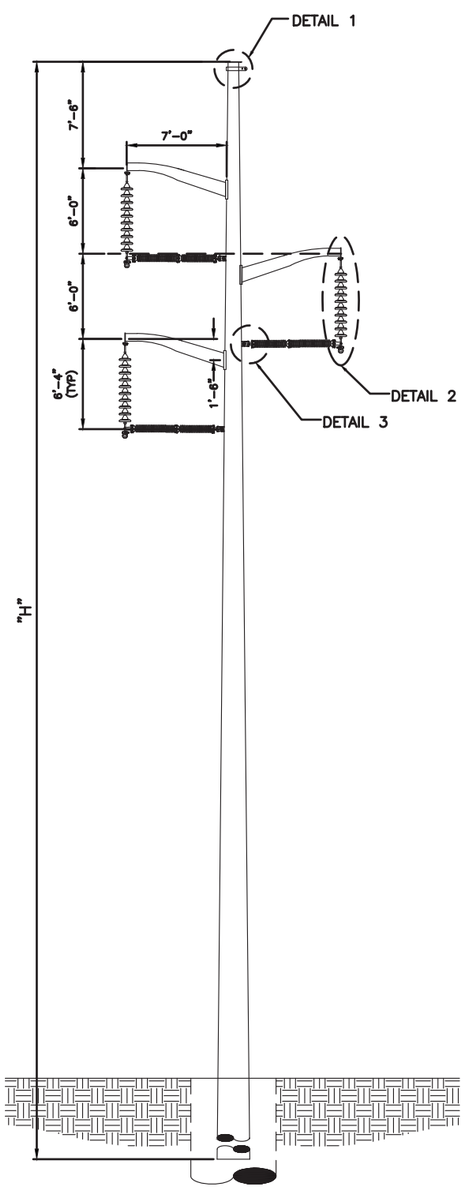

FRONT ELEVATION

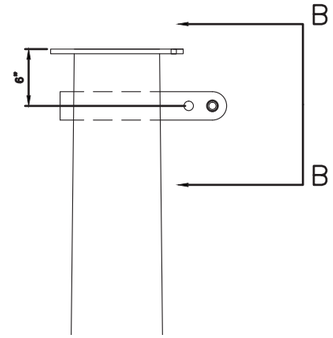

DETAIL 1
SHIELD WIRE ASSEMBLY

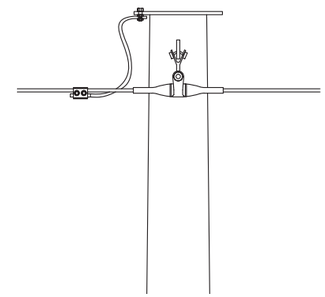

SECTION B–B
SHIELD WIRE ASSEMBLY

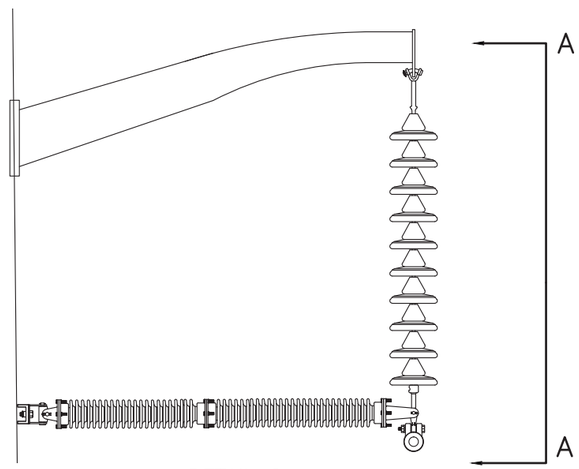

DETAIL 2
CONDUCTOR HARDWARE ASSEMBLY

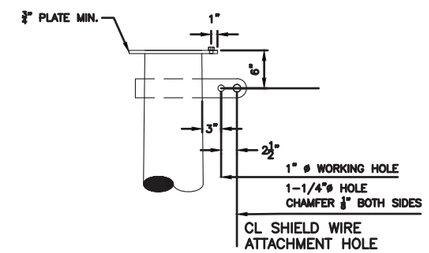

DETAIL 1A
SHIELD WIRE ATTACHMENT VANG
WITH GROUNDING NUT

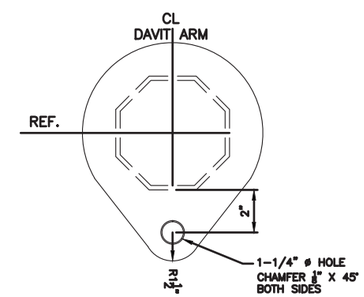

DETAIL 2A
CONDUCTOR ATTACHMENT PLATES
(TYPICAL 3 LOCATIONS)

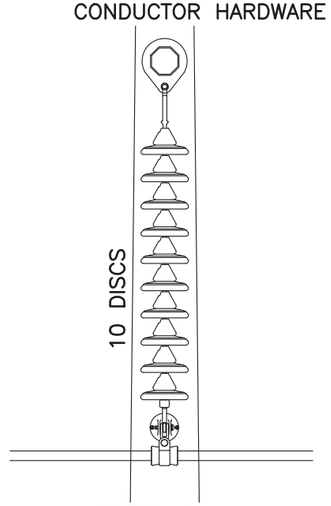

DETAIL A–A
CONDUCTOR HARDWARE ASSEMBLY

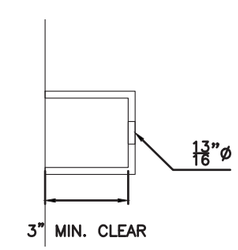

DETAIL 3
STRUT INSULATOR ATTACHMENT BRACKET
(TYPICAL 3 LOCATIONS)

VER	DATE	VERSION DESCRIPTION	PREPARED/REVIEWED/APPROVED
1	9/19/14	ISSUED FOR SCOPE DOCUMENT	EJJ FTX NPA
2	10/31/17	AS-BUILT AND ISSUED FOR NHSEC RECORD	DRD GC NPA
3			
4			
5			
6			
7			

VERSION 2

nationalgrid

PREPARED BY	EJJ	9/19/14
REVIEWED BY	FTX	9/19/14
APPROVED BY	NPA	9/19/14
SCALE	N.T.S.	
SHEET	1 OF 1	
INDEX	400298	

SCOBIE POND – TEWKSBURY
115 KV REPLACEMENT STRUCTURE
SINGLE CIRCUIT Y151 LINE
STEEL DELTA DAVIT ARM SUSPENSION – RESTRAINED
795 ACSS DRAKE

PRINTED COPIES ARE NOT DOCUMENT CONTROLLED. FOR THE LATEST AUTHORIZED VERSION PLEASE REFER TO THE ENGINEERING DEPARTMENT DOCUMENTS CABINET IN DOCUMENTUM

PRINTED 10/30/2017 12:47 PM

INCHES ON ORIGINAL

CONFIDENTIALITY STATEMENT: THIS DOCUMENT CONTAINS CONFIDENTIAL AND PROPRIETARY INFORMATION OF NATIONAL GRID SOLELY IN CONNECTION WITH THE SPECIFIC PROJECT FOR WHICH IT HAS BEEN TRANSMITTED. ANY OTHER USE, ITS TRANSMITTAL TO THIRD PARTIES, OR ITS REPRODUCTION WITHOUT PRIOR EXPRESS WRITTEN AUTHORIZATION OF NATIONAL GRID IS STRICTLY PROHIBITED.

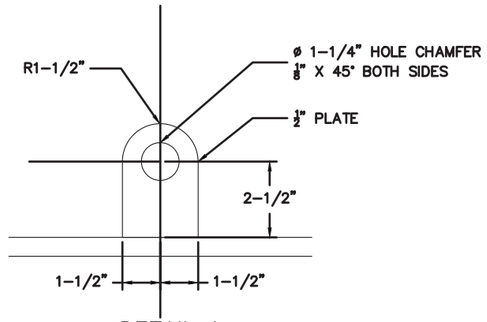

DETAIL 1
6 LOCATIONS

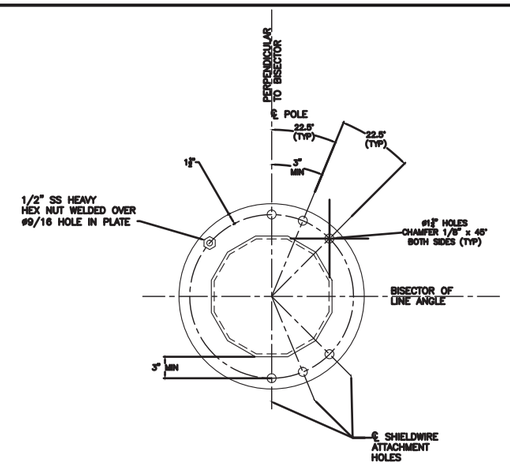

SECTION A-A
POLE CAP WITH SHIELD WIRE ATTACHMENT AND GROUNDING NUT
(TYPICAL 2 LOCATIONS)

NOTES:
1. REFER TO WORK LIST FOR POLE HEIGHT.
2. SEE SPECIFICATION SP.06.01301.101 FOR STRUCTURE GROUNDING DETAILS.
3. SEE SPECIFICATION SP.06.01.301.201 FOR STRUCTURE NUMBERING AND WARNING SIGNS REQUIRED FOR ALL STRUCTURES.
4. STEEL POLE MANUFACTURER DRAWINGS TO SUPERCEDE CONCEPT DRAWINGS AND WILL BE ISSUED FOR CONSTRUCTION AS SOON AS THEY ARE AVAILABLE.
5. TURNER 2000A LOAD BREAK TMX SWITCH TO BE USED.

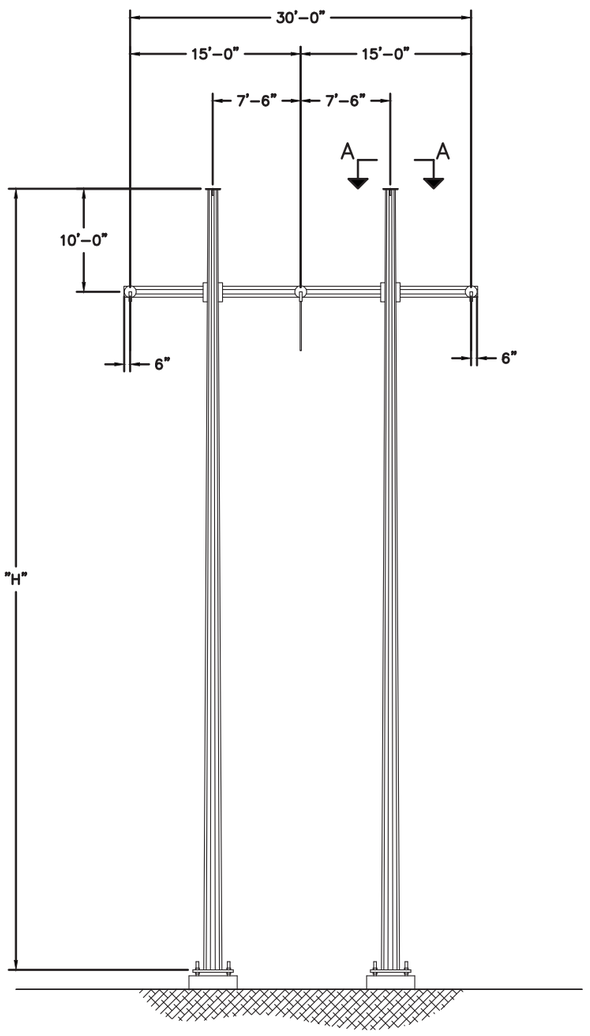

FRONT ELEVATION

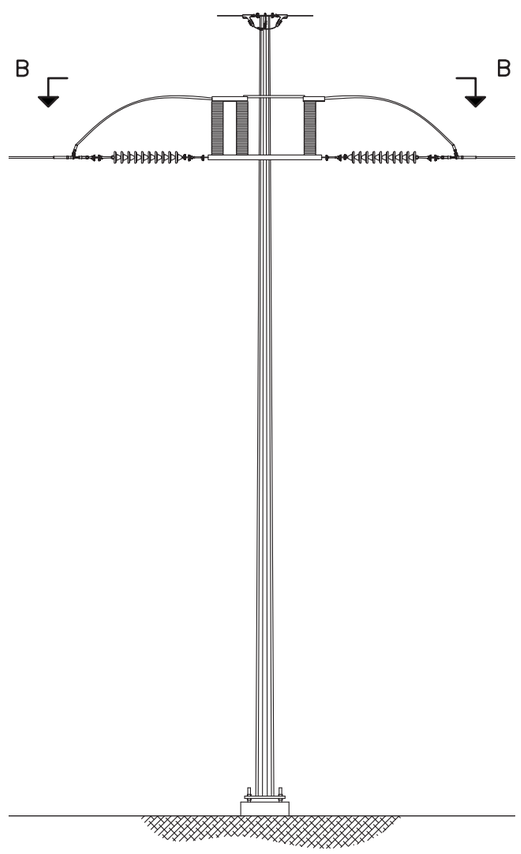

SIDE ELEVATION

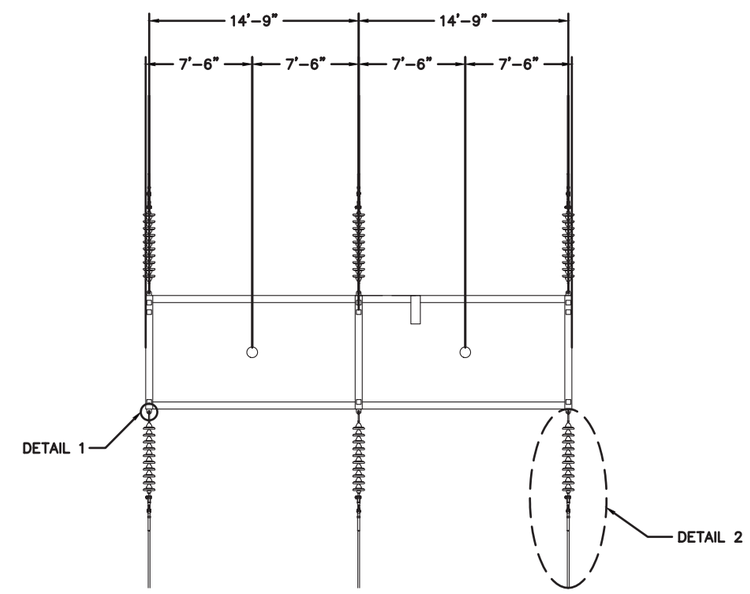

SECTION B-B
PLAN VIEW OF SWITCH RACK

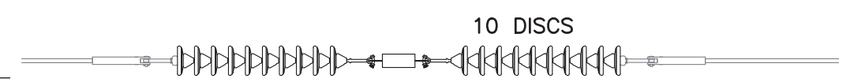

DETAIL 2
CONDUCTOR HARDWARE ASSEMBLY

VER	DATE	VERSION DESCRIPTION	PREPARED/REVIEWED/APPROVED
1	9/19/14	ISSUED FOR SCOPE DOCUMENT	EJJ FTX NPA
2	10/31/17	AS-BUILT AND ISSUED FOR NHSEC RECORD	DRD GC NPA
3			
4			
5			
6			
7			

VERSION 2

nationalgrid

PREPARED BY	EJJ	9/19/14
REVIEWED BY	FTX	9/19/14
APPROVED BY	NPA	9/19/14
SCALE	N.T.S.	
SHEET	1 OF 1	
INDEX	400298	

SCOBIE POND - TEWKSBURY
115KV REPLACEMENT STRUCTURE
SINGLE CIRCUIT Y151 LINE
STEEL H-FRAME SWITCH SINGLE INS STRING

PRINTED COPIES ARE NOT DOCUMENT CONTROLLED. FOR THE LATEST AUTHORIZED VERSION PLEASE REFER TO THE ENGINEERING DEPARTMENT DOCUMENTS CABINET IN DOCUMENTUM

PRINTED 10/30/2017 1:06 PM

INCHES ON ORIGINAL

CONFIDENTIALITY STATEMENT: THIS DOCUMENT CONTAINS CONFIDENTIAL AND PROPRIETARY INFORMATION OF NATIONAL GRID SOLELY IN CONNECTION WITH THE SPECIFIC PROJECT FOR WHICH IT HAS BEEN TRANSMITTED. ANY OTHER USE, ITS TRANSMITTAL TO THIRD PARTIES, OR ITS REPRODUCTION WITHOUT PRIOR EXPRESS WRITTEN AUTHORIZATION OF NATIONAL GRID IS STRICTLY PROHIBITED.

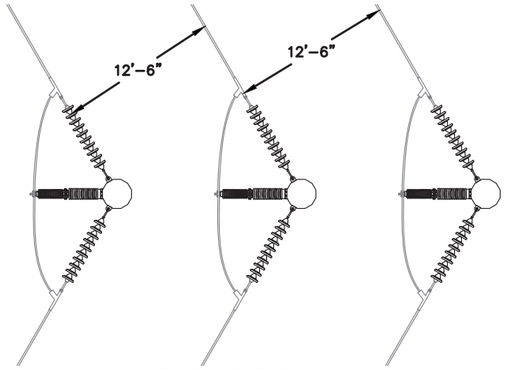

PLAN VIEW

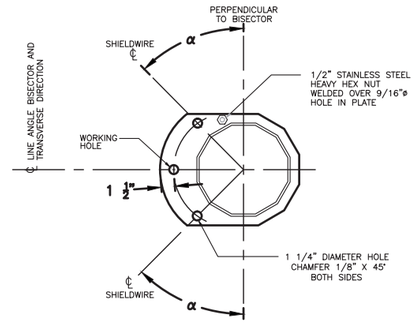

SECTION A–A
POLE CAP WITH SHIELD WIRE ATTACHMENT AND GROUNDING NUT

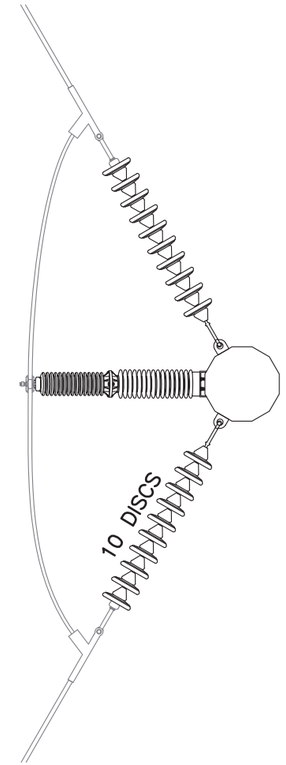

NOTES:
1. REFER TO WORK LIST FOR POLE HEIGHT.
2. SEE SPECIFICATION SP.06.01.301.101 FOR STRUCTURE GROUNDING DETAILS.
3. SEE SPECIFICATION SP.06.01.301.201 FOR STRUCTURE NUMBERING AND WARNING SIGNS REQUIRED FOR ALL STRUCTURES.
4. STEEL POLE MANUFACTURER DRAWINGS TO SUPERCEDE CONCEPT DRAWINGS AND WILL BE ISSUED FOR CONSTRUCTION AS SOON AS THEY ARE AVAILABLE.
5. DIMENSION IS 14'–0" FOR STRUCTURE 85
6. POST INSULATORS TO BE ATTACHED AT MIDPOINT OF VANG ATTACHMENTS.

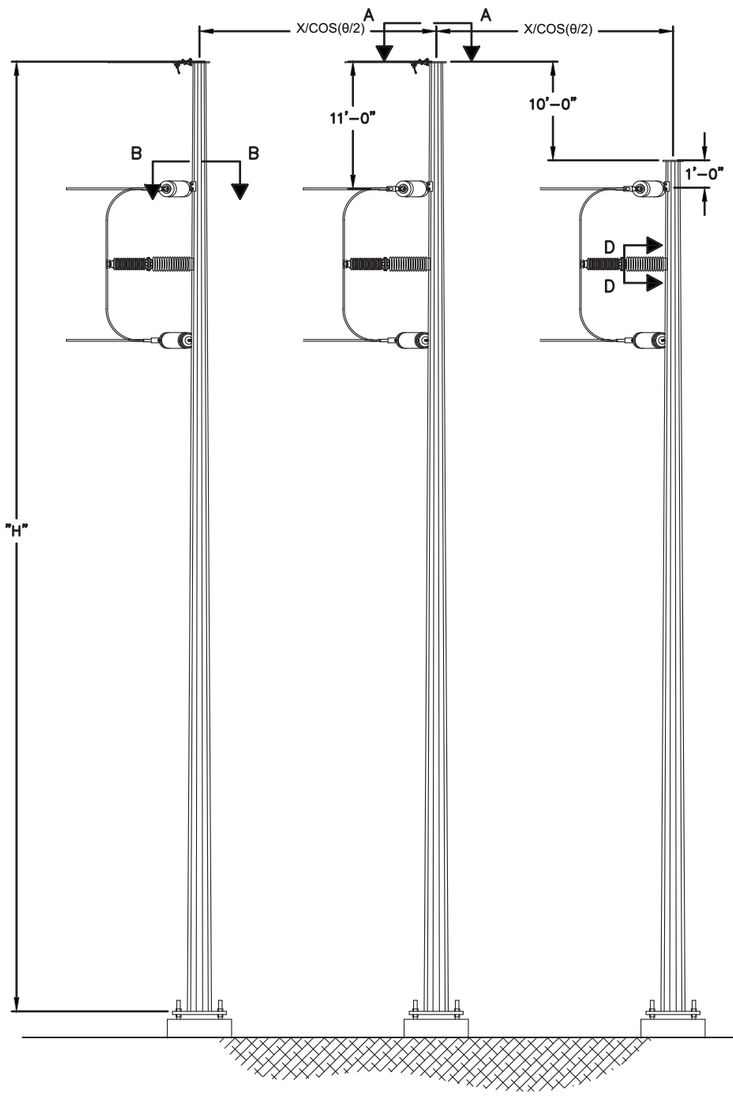

FRONT ELEVATION

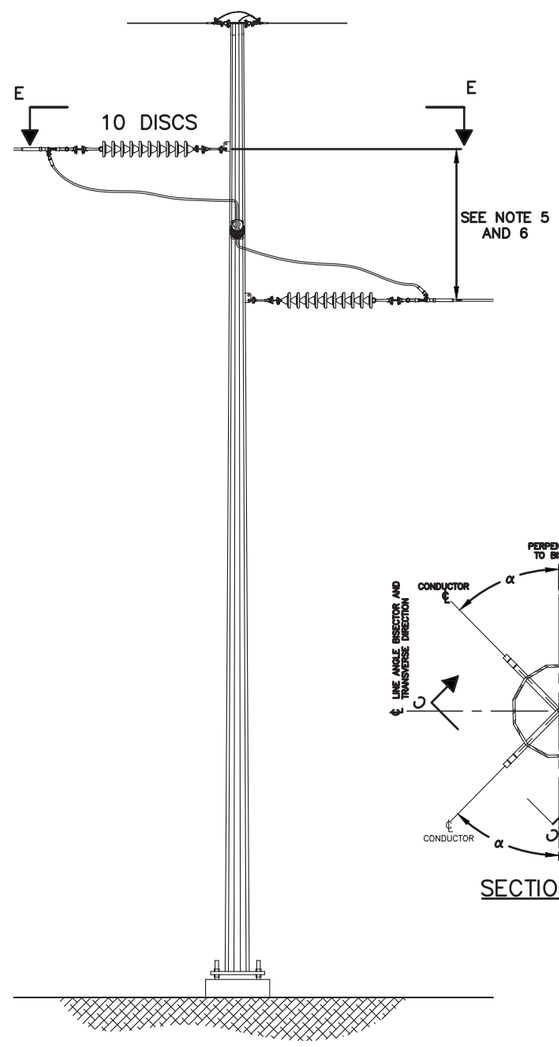

SIDE ELEVATION

SECTION E–E
CONDUCTOR HARDWARE ASSEMBLY

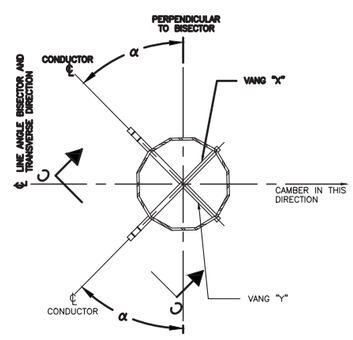

SECTION B–B

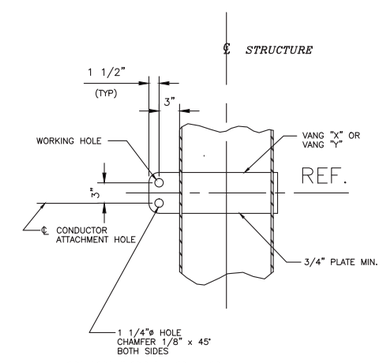

SECTION C–C

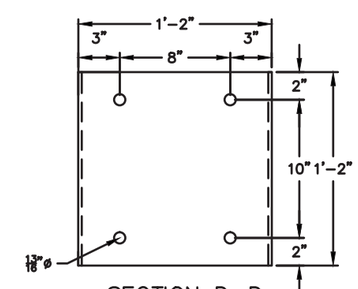

SECTION D–D
POST INSULATOR BRACKET FOR JUMPER LOOP
3" MIN. CLEAR REQ.

VER	DATE	VERSION DESCRIPTION	PREPARED/REVIEWED/APPROVED
1	09/19/14	ISSUED FOR SCOPE DOCUMENT	EJJ FTX NPA
2	10/31/17	AS–BUILT AND ISSUED FOR NHSEC RECORD	DRD GC NPA
3			
4			
5			
6			
7			

VERSION 2

nationalgrid

PREPARED BY	EJJ	9/19/14
REVIEWED BY	FTX	9/19/14
APPROVED BY	NPA	9/19/14
SCALE	N.T.S.	
SHEET	1 OF 1	
INDEX	400298	

SCOBIE POND – TEWKSBURY
115KV REPLACEMENT STRUCTURE–DEMARCATION
SINGLE CIRCUIT Y151 LINE
STEEL 3 POLE DEAD–END – SINGLE INS. STRING

PRINTED COPIES ARE NOT DOCUMENT CONTROLLED. FOR THE LATEST AUTHORIZED VERSION PLEASE REFER TO THE ENGINEERING DEPARTMENT DOCUMENTS CABINET IN DOCUMENTUM

PRINTED 10/30/2017 1:09 PM

INCHES ON ORIGINAL

400298-C-S-14B

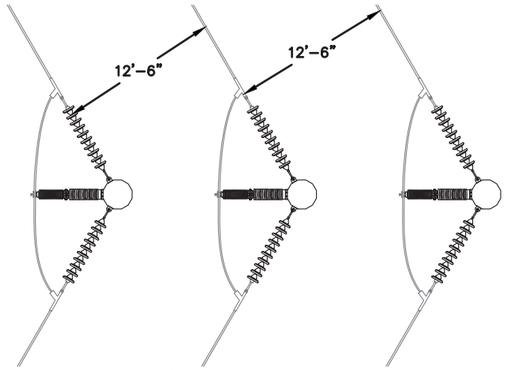

PLAN VIEW

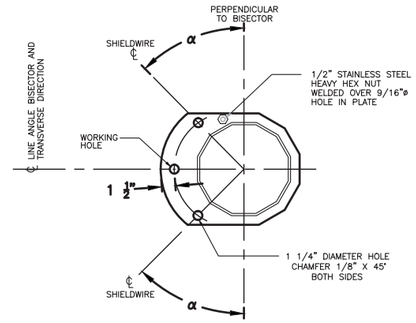

SECTION A–A
POLE CAP WITH SHIELD WIRE ATTACHMENT AND GROUNDING NUT

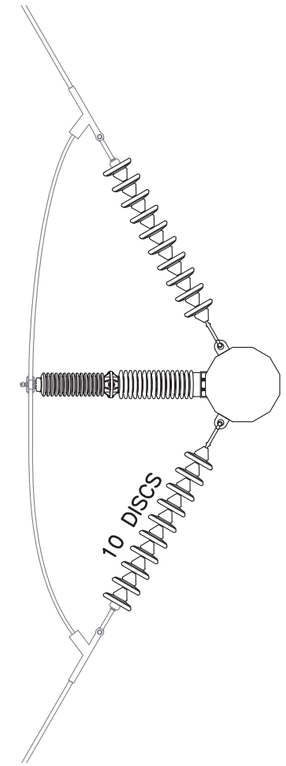

SECTION E–E
CONDUCTOR HARDWARE ASSEMBLY

NOTES:
1. REFER TO WORK LIST FOR POLE HEIGHT.
2. SEE SPECIFICATION SP.06.01.301.101 FOR STRUCTURE GROUNDING DETAILS.
3. SEE SPECIFICATION SP.06.01.301.201 FOR STRUCTURE NUMBERING AND WARNING SIGNS REQUIRED FOR ALL STRUCTURES.
4. STEEL POLE MANUFACTURER DRAWINGS TO SUPERCEDE CONCEPT DRAWINGS AND WILL BE ISSUED FOR CONSTRUCTION AS SOON AS THEY ARE AVAILABLE.
5. DIMENSION IS 8'–0" FOR STRUCTURE 28 AND 24'–0" FOR STRUCTURE 29.
6. POST INSULATORS TO BE ATTACHED AT MIDPOINT OF VANG ATTACHMENTS.

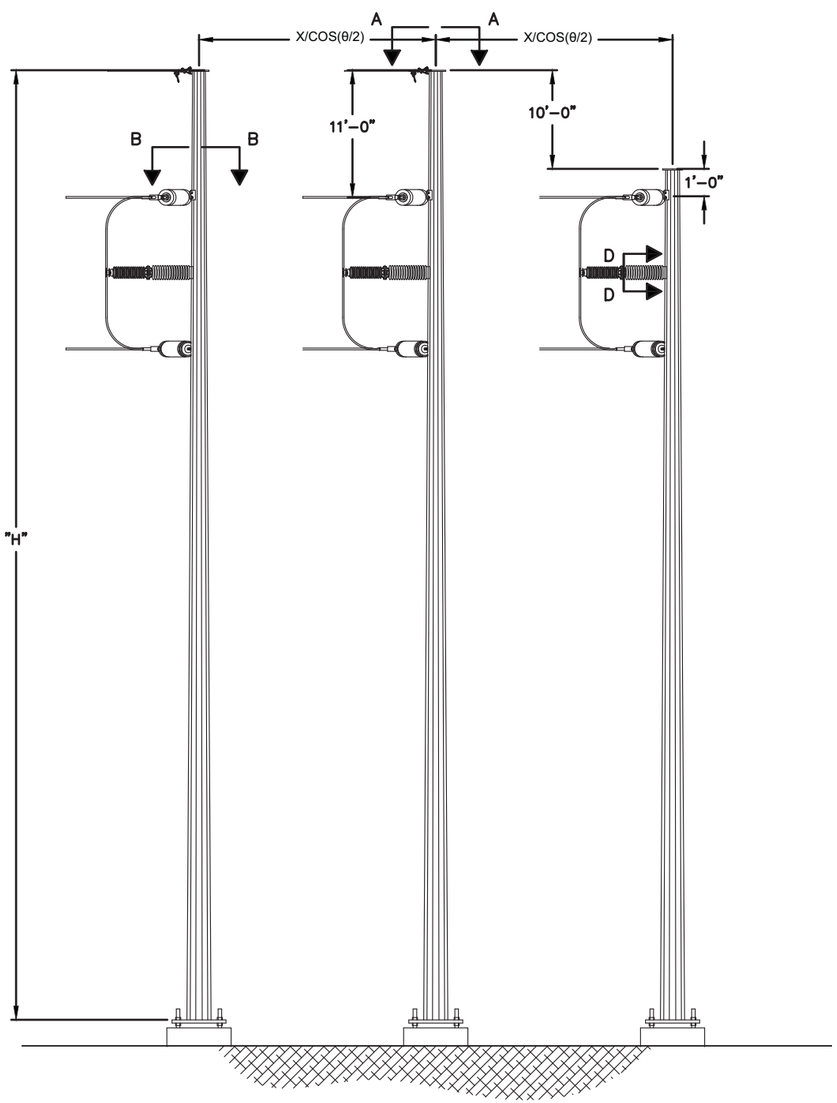

FRONT ELEVATION

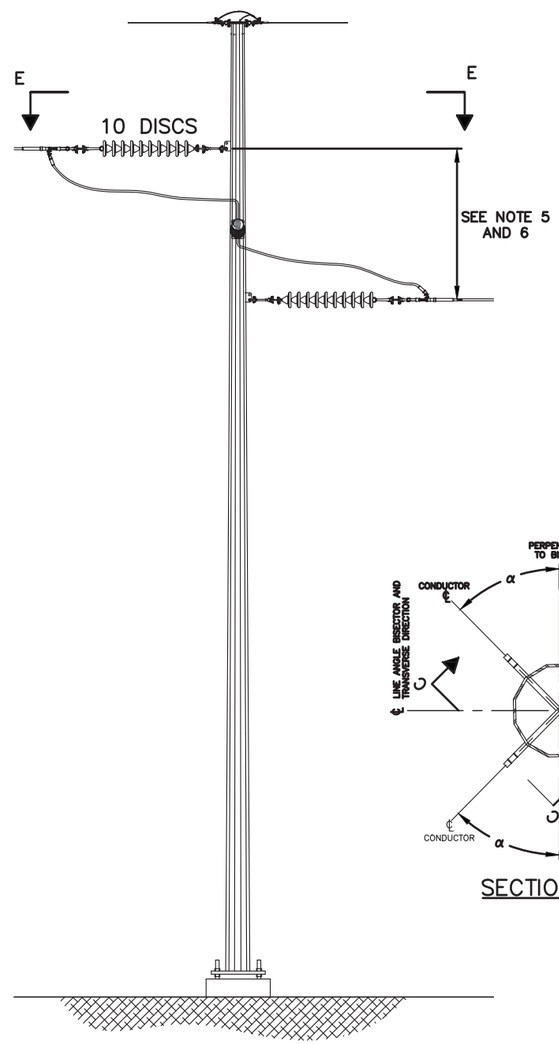

SIDE ELEVATION

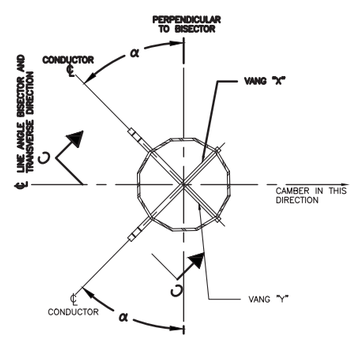

SECTION B–B

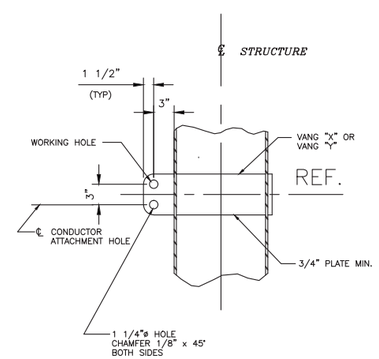

SECTION C–C

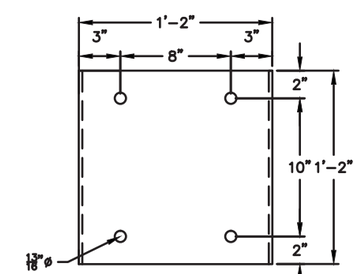

SECTION D–D
POST INSULATOR BRACKET FOR JUMPER LOOP
3" MIN. CLEAR REQ.

VER	DATE	VERSION DESCRIPTION	PREPARED	REVIEWED	APPROVED
1	05/22/15	ISSUED FOR PERMITTING	JLM	FTX	NPA
2	10/31/17	AS-BUILT AND ISSUED FOR NHSEC RECORD	DRD	GC	NPA
3					
4					
5					
6					
7					

VERSION 2

nationalgrid

PREPARED BY	EJJ	5/22/15
REVIEWED BY	FTX	5/22/15
APPROVED BY	NPA	5/22/15
SCALE	N.T.S.	
SHEET	1 OF 1	
INDEX	400298	

SCOBIE POND – TEWKSBURY
115KV REPLACEMENT STRUCTURE
SINGLE CIRCUIT Y151 LINE
STEEL 3 POLE DEAD-END – SINGLE INS. STRING

CONFIDENTIALITY STATEMENT: THIS DOCUMENT CONTAINS CONFIDENTIAL AND PROPRIETARY INFORMATION OF NATIONAL GRID. IT IS TO BE USED BY AUTHORIZED CONTRACTORS FOR NATIONAL GRID SOLELY IN CONNECTION WITH THE SPECIFIC PROJECT FOR WHICH IT HAS BEEN TRANSMITTED. ANY OTHER USE, ITS TRANSMITTAL TO THIRD PARTIES, OR ITS REPRODUCTION WITHOUT PRIOR EXPRESS WRITTEN AUTHORIZATION OF NATIONAL GRID IS STRICTLY PROHIBITED.

PRINTED COPIES ARE NOT DOCUMENT CONTROLLED. FOR THE LATEST AUTHORIZED VERSION PLEASE REFER TO THE ENGINEERING DEPARTMENT DOCUMENTS CABINET IN DOCUMENTUM

PRINTED 12/15/2017 1:05 PM

INCHES ON ORIGINAL

400298-C-S-14B

400298-C-S-15

CONFIDENTIALITY STATEMENT: THIS DOCUMENT CONTAINS CONFIDENTIAL AND PROPRIETARY INFORMATION OF NATIONAL GRID. IT IS TO BE USED BY AUTHORIZED CONTRACTORS FOR NATIONAL GRID SOLELY IN CONNECTION WITH THE SPECIFIC PROJECT FOR WHICH IT HAS BEEN TRANSMITTED. ANY OTHER USE, ITS TRANSMITTAL TO THIRD PARTIES, OR ITS REPRODUCTION WITHOUT PRIOR EXPRESS WRITTEN AUTHORIZATION OF NATIONAL GRID IS STRICTLY PROHIBITED.

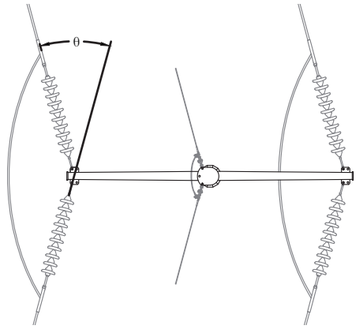

PLAN VIEW

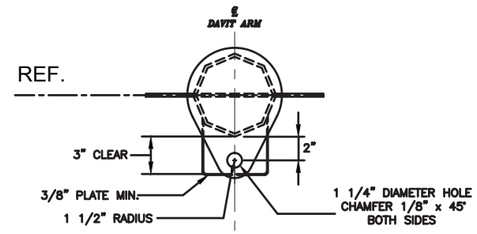

SECTION A–A
CONDUCTOR ATTACHMENT PLATES
(TYPICAL 3 LOCATIONS)

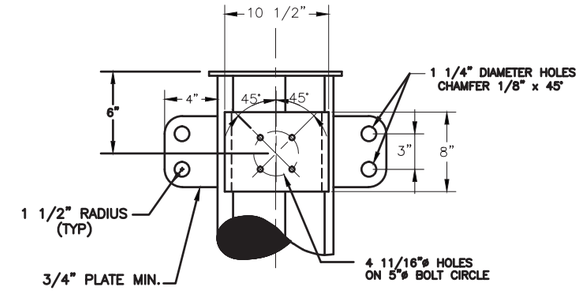

SECTION C–C
CONDUCTOR ATTACHMENT PLATES
(TYPICAL 3 LOCATIONS)

NOTES:
1. REFER TO WORK LIST FOR POLE HEIGHT.
2. SEE SPECIFICATION SP.06.01.301.101 FOR STRUCTURE GROUNDING DETAILS.
3. SEE SPECIFICATION SP.06.01.301.201 FOR STRUCTURE NUMBERING AND WARNING SIGNS REQUIRED FOR ALL STRUCTURES.
4. STEEL POLE MANUFACTURER DRAWINGS TO SUPERCEDE CONCEPT DRAWINGS AND WILL BE ISSUED FOR CONSTRUCTION AS SOON AS THEY ARE AVAILABLE.

DIMENSION TABLE						
	A	B	C	D	α	θ
1	11'–6"	6'–0"	7'–6"	1'–6" TYP	10°	0°–20°
2	11'–6"	6'–0"	8'–0"	1'–6" TYP	15°	>20°–40°

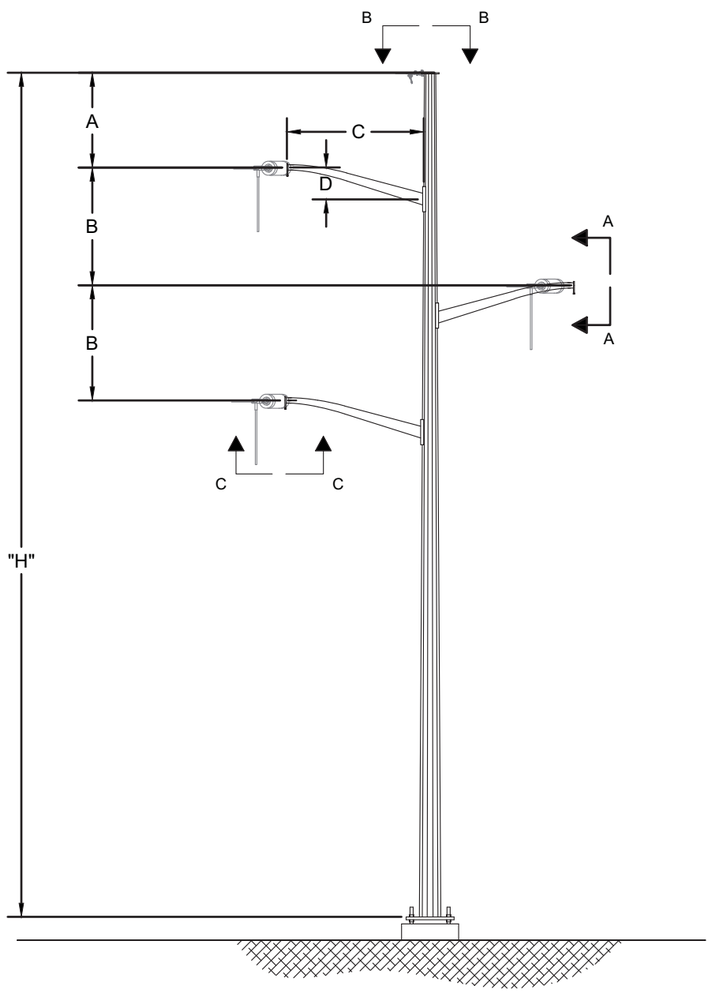

FRONT ELEVATION

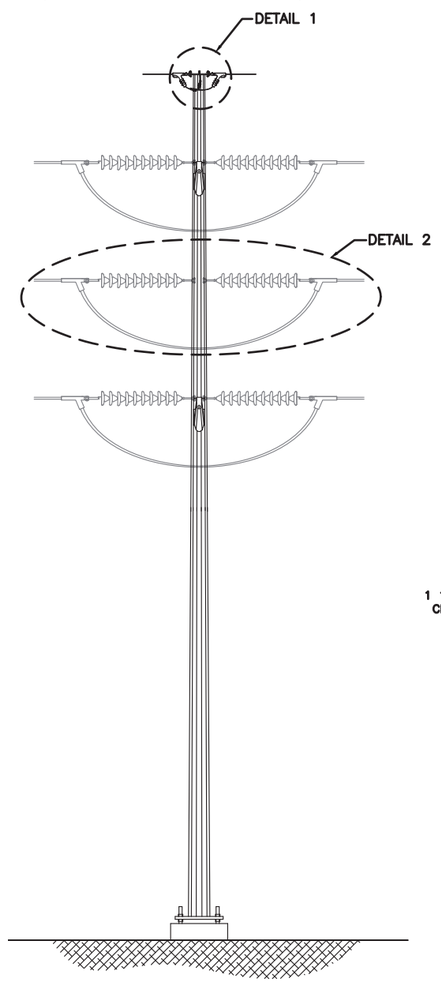

SIDE ELEVATION

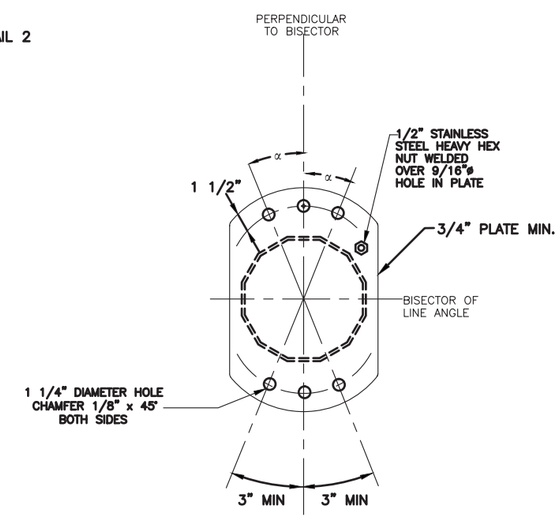

SECTION B–B
POLE CAP WITH SHIELD WIRE
ATTACHMENT AND GROUNDING NUT

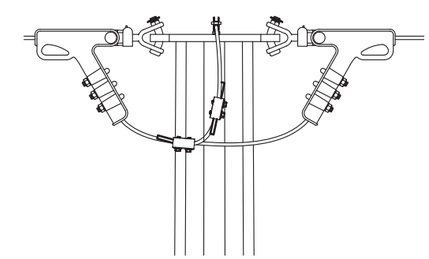

DETAIL 1
SHIELD WIRE ASSEMBLY

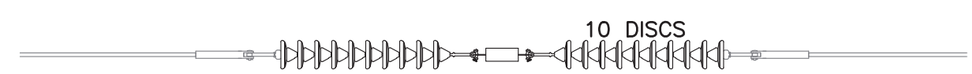

DETAIL 2
CONDUCTOR HARDWARE ASSEMBLY

VER	DATE	VERSION DESCRIPTION	PREPARED/REVIEWED/APPROVED
1	9/19/14	ISSUED FOR SCOPE DOCUMENT	EJJ FTX NPA
2	10/31/17	AS–BUILT AND ISSUED FOR NHSEC RECORD	DRD GC NPA
3			
4			
5			
6			
7			

VERSION 2

nationalgrid

PREPARED BY	EJJ	9/19/14
REVIEWED BY	FTX	9/19/14
APPROVED BY	NPA	9/19/14
SCALE	N.T.S.	
SHEET	1 OF 1	
INDEX	400298	

SCOBIE POND – TEWKSBURY
115 KV REPLACEMENT STRUCTURE
SINGLE CIRCUIT Y151 LINE
STEEL DAVIT ARM DEADEND – SINGLE INS STRING

PRINTED COPIES ARE NOT DOCUMENT CONTROLLED. FOR THE LATEST AUTHORIZED VERSION PLEASE REFER TO THE ENGINEERING DEPARTMENT DOCUMENTS CABINET IN DOCUMENTUM

PRINTED 10/30/2017 1:15 PM

INCHES ON ORIGINAL

CONFIDENTIALITY STATEMENT: THIS DOCUMENT CONTAINS CONFIDENTIAL AND PROPRIETARY INFORMATION OF NATIONAL GRID, IT IS TO BE USED BY AUTHORIZED CONTRACTORS FOR NATIONAL GRID SOLELY IN CONNECTION WITH THE SPECIFIC PROJECT FOR WHICH IT HAS BEEN TRANSMITTED. ANY OTHER USE, ITS TRANSMITTAL TO THIRD PARTIES, OR ITS REPRODUCTION WITHOUT PRIOR EXPRESS WRITTEN AUTHORIZATION OF NATIONAL GRID IS STRICTLY PROHIBITED.

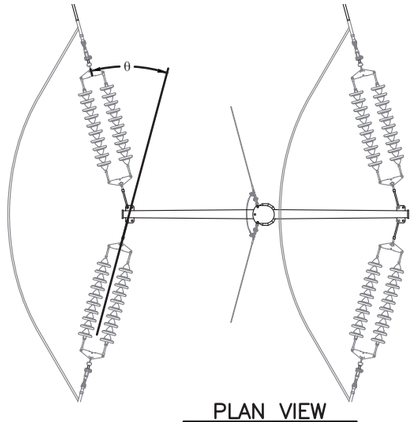

PLAN VIEW

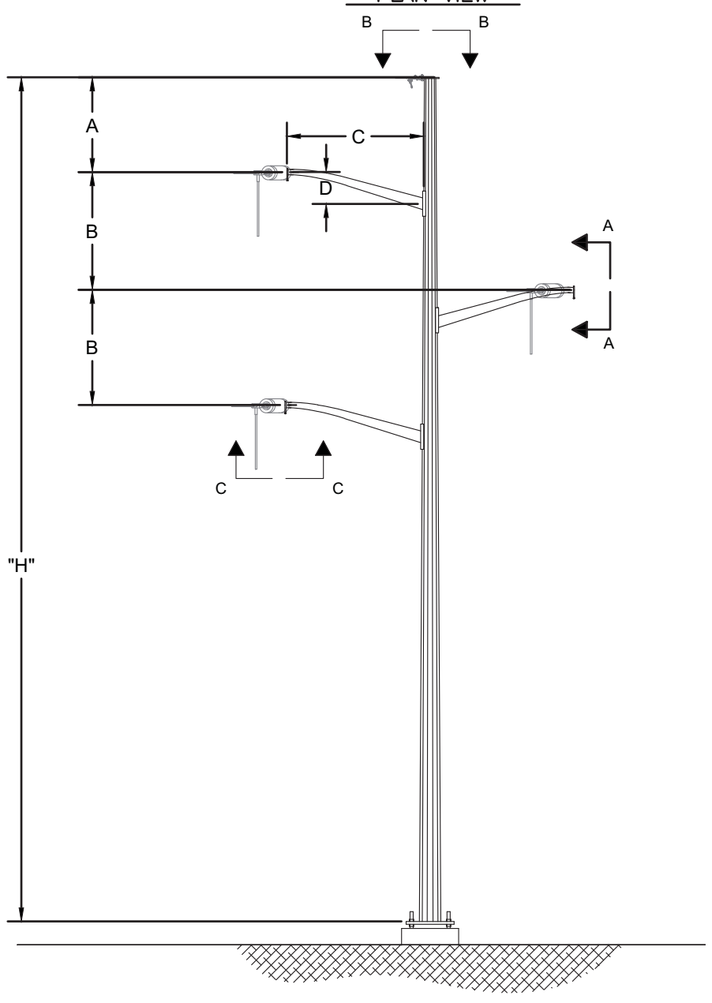

FRONT ELEVATION

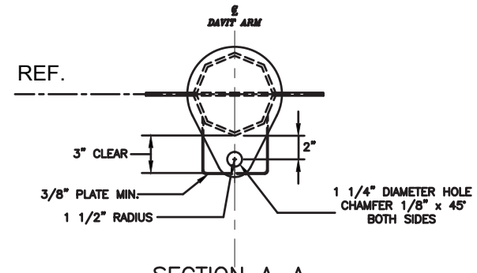

SECTION A–A
CONDUCTOR ATTACHMENT PLATES
(TYPICAL 3 LOCATIONS)

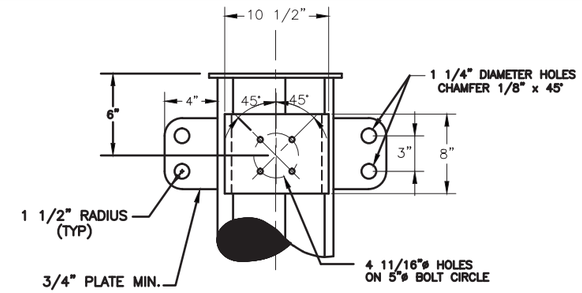

SECTION C–C
CONDUCTOR ATTACHMENT PLATES
(TYPICAL 3 LOCATIONS)

NOTES:
1. REFER TO WORK LIST FOR POLE HEIGHT.
2. SEE SPECIFICATION SP.06.01.301.101 FOR STRUCTURE GROUNDING DETAILS.
3. SEE SPECIFICATION SP.06.01.301.201 FOR STRUCTURE NUMBERING AND WARNING SIGNS REQUIRED FOR ALL STRUCTURES.
4. STEEL POLE MANUFACTURER DRAWINGS TO SUPERCEDED CONCEPT DRAWINGS AND WILL BE ISSUED FOR CONSTRUCTION AS SOON AS THEY ARE AVAILABLE.

DIMENSION TABLE

	A	B	C	D	α	θ
1	11'–6"	6'–0"	7'–6"	1'–6" TYP	10°	0°–20°
2	11'–6"	6'–0"	8'–0"	1'–6" TYP	15°	>20°–40°

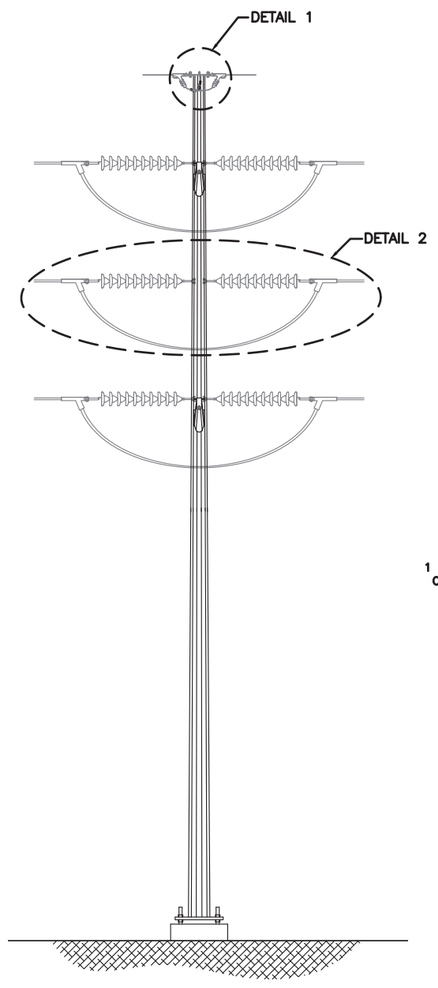

SIDE ELEVATION

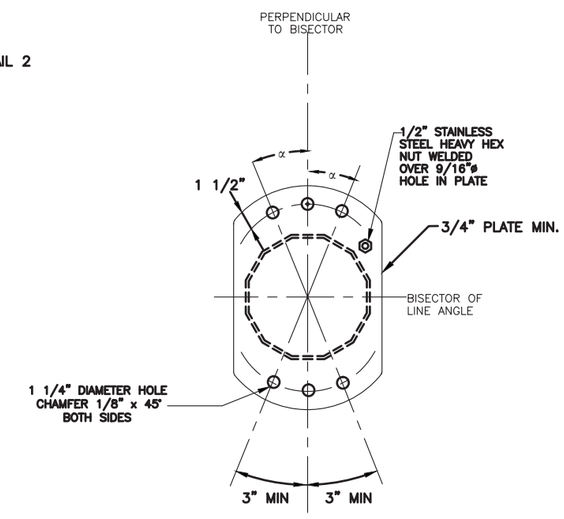

SECTION B–B
POLE CAP WITH SHIELD WIRE
ATTACHMENT AND GROUNDING NUT

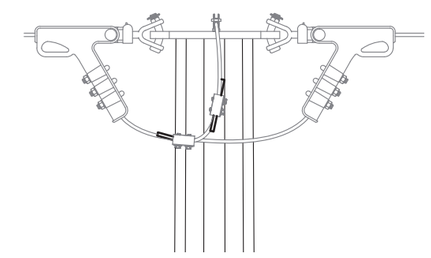

DETAIL 1
SHIELD WIRE ASSEMBLY

10 DISCS

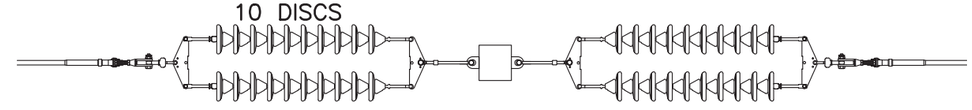

DETAIL 2
CONDUCTOR HARDWARE ASSEMBLY

VER	DATE	VERSION DESCRIPTION	PREPARED/REVIEWED/APPROVED
1	9/19/14	ISSUED FOR SCOPE DOCUMENT	EJJ FTX NPA
2	10/31/17	AS–BUILT AND ISSUED FOR NHSEC RECORD	DRD GC NPA
3			
4			
5			
6			
7			

VERSION 2

nationalgrid

PREPARED BY	EJJ	9/19/14
REVIEWED BY	FTX	9/19/14
APPROVED BY	NPA	9/19/14
SCALE	N.T.S.	
SHEET	1 OF 1	
INDEX	400298	

SCOBIE POND – TEWKSBURY
115 KV REPLACEMENT STRUCTURE
SINGLE CIRCUIT Y151 LINE
STEEL DAVIT ARM DEADEND – DOUBLE INS STRING

PRINTED 10/30/2017 1:17 PM

PRINTED COPIES ARE NOT DOCUMENT CONTROLLED. FOR THE LATEST AUTHORIZED VERSION PLEASE REFER TO THE ENGINEERING DEPARTMENT DOCUMENTS CABINET IN DOCUMENTUM

INCHES ON ORIGINAL

CONFIDENTIALITY STATEMENT: THIS DOCUMENT CONTAINS CONFIDENTIAL AND PROPRIETARY INFORMATION OF NATIONAL GRID SOLELY IN CONNECTION WITH THE SPECIFIC PROJECT FOR WHICH IT HAS BEEN TRANSMITTED. ANY OTHER USE, ITS TRANSMITTAL TO THIRD PARTIES, OR ITS REPRODUCTION WITHOUT PRIOR EXPRESS WRITTEN AUTHORIZATION OF NATIONAL GRID IS STRICTLY PROHIBITED.

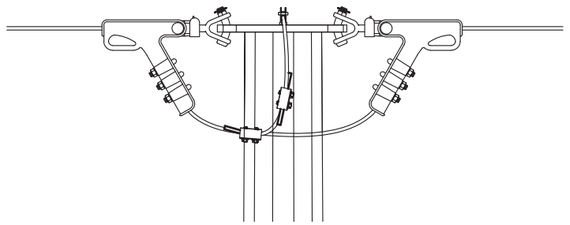

DETAIL 1
SHIELD WIRE ASSEMBLY

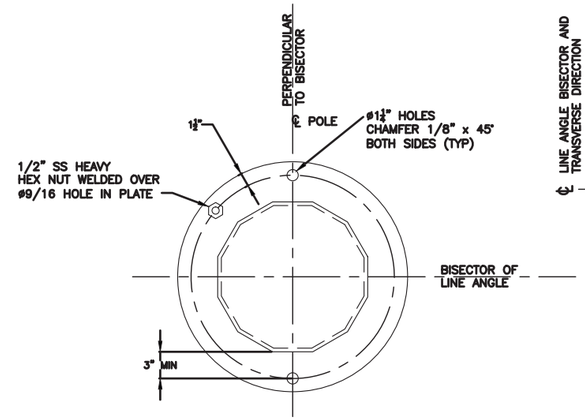

SECTION A–A
POLE CAP WITH SHIELD WIRE ATTACHMENT AND GROUNDING NUT

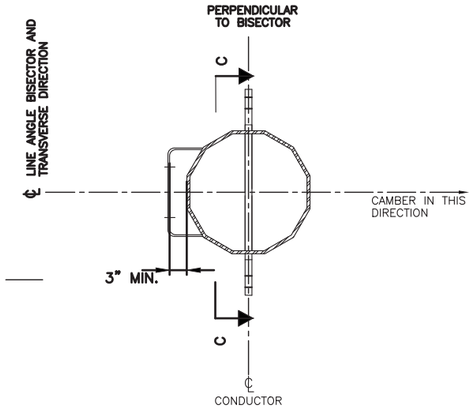

SECTION B–B
(TYP. 3 PLACES)

NOTES:
1. REFER TO WORK LIST FOR POLE HEIGHT.
2. SEE SPECIFICATION SP.06.01.301.101 FOR STRUCTURE GROUNDING DETAILS.
3. SEE SPECIFICATION SP.06.01.301.201 FOR STRUCTURE NUMBERING AND WARNING SIGNS REQUIRED FOR ALL STRUCTURES.
4. STEEL POLE MANUFACTURER DRAWINGS TO SUPERCEDE CONCEPT DRAWINGS AND WILL BE ISSUED FOR CONSTRUCTION AS SOON AS THEY ARE AVAILABLE.
5. TURNER SILVERTIP 1TSB SWITCH OR SIMILAR TO BE USED.
6. SINGLE POLE STRUCTURE SHIELDWIRE ON Y151 MAINLINE WILL UTILIZE OPGW AND ON SOUTH BROADWAY TAP WILL UTILIZE 3/8" EHS

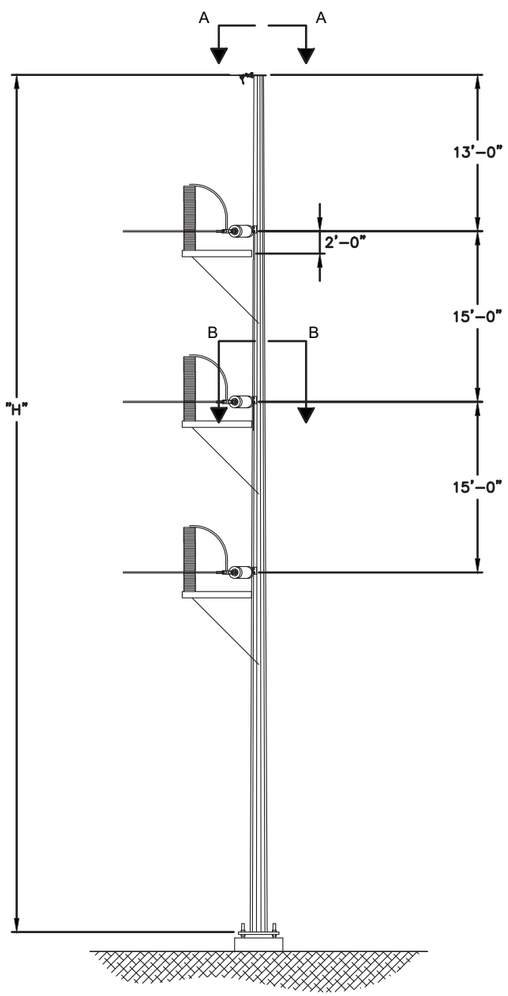

FRONT ELEVATION

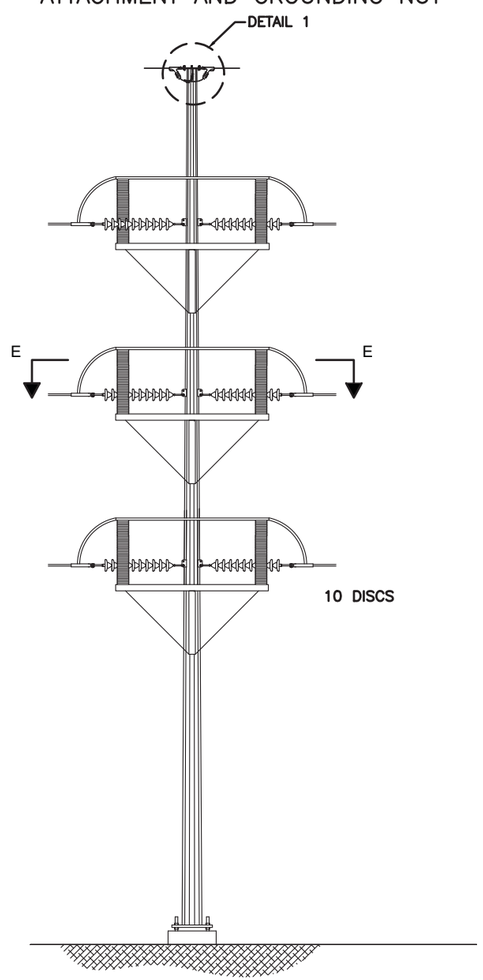

SIDE ELEVATION

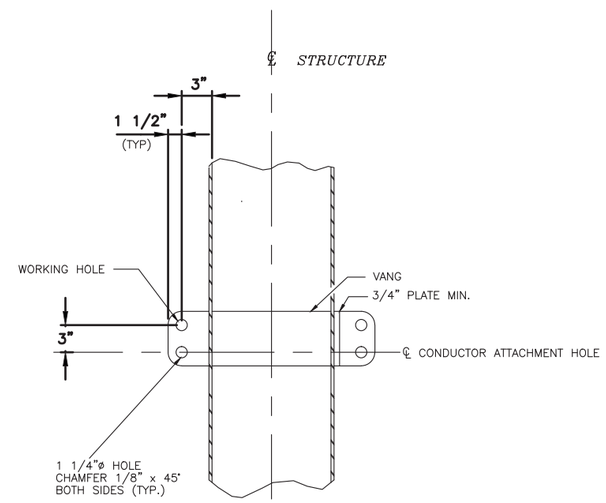

SECTION C–C

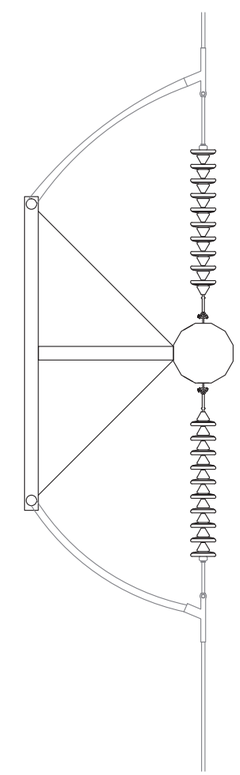

SECTION E–E
CONDUCTOR HARDWARE ASSEMBLY

VER	DATE	VERSION DESCRIPTION	PREPARED/REVIEWED/APPROVED
1	09/19/14	ISSUED FOR SCOPE DOCUMENT	EJJ FTX NPA
2	02/27/15	RE-ISSUED FOR SCOPE DOCUMENT	RAM FTX NPA
3	02/05/16	REVISED FOR NH SEC FILING	MKB FTX NPA
4	10/31/17	AS-BUILT AND ISSUED FOR NHSEC RECORD	DRD GC NPA
5			
6			
7			

VERSION 4

nationalgrid

PREPARED BY	MKB	02/05/16
REVIEWED BY	FTX	02/05/16
APPROVED BY	NPA	02/05/16
SCALE	NTS	
SHEET	1 OF 1	
INDEX	400298	

SCOBIE POND – TEWKSBURY
115KV REPLACEMENT STRUCTURE
SINGLE CIRCUIT Y151 LINE
STEEL SINGLE POLE SWITCH – SINGLE INS. STRING

PRINTED COPIES ARE NOT DOCUMENT CONTROLLED. FOR THE LATEST AUTHORIZED VERSION PLEASE REFER TO THE ENGINEERING DEPARTMENT DOCUMENTS CABINET IN DOCUMENTUM

PRINTED 10/30/2017 1:21 PM

INCHES ON ORIGINAL

400298-C-S-18

CONFIDENTIALITY STATEMENT: THIS DOCUMENT CONTAINS CONFIDENTIAL AND PROPRIETARY INFORMATION OF NATIONAL GRID SOLELY IN CONNECTION WITH THE SPECIFIC PROJECT FOR WHICH IT HAS BEEN TRANSMITTED. ANY OTHER USE, ITS TRANSMITTAL TO THIRD PARTIES, OR ITS REPRODUCTION WITHOUT PRIOR EXPRESS WRITTEN AUTHORIZATION OF NATIONAL GRID IS STRICTLY PROHIBITED.

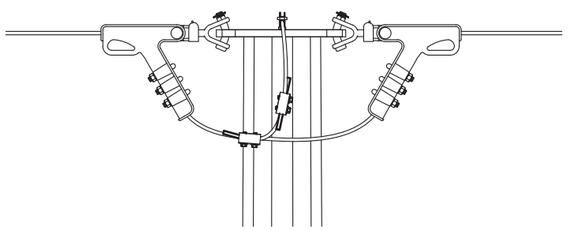

DETAIL 1
SHIELD WIRE ASSEMBLY

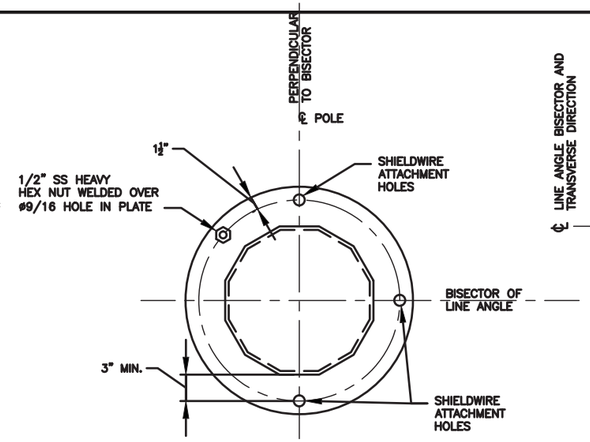

SECTION A–A
POLE CAP WITH SHIELD WIRE ATTACHMENT AND GROUNDING NUT

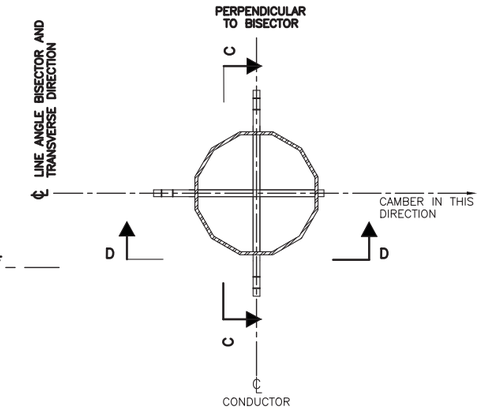

SECTION B–B
(TYP. 3 PLACES)

NOTES:
1. REFER TO WORK LIST FOR POLE HEIGHT.
2. SEE SPECIFICATION SP.06.01.301.101 FOR STRUCTURE GROUNDING DETAILS.
3. SEE SPECIFICATION SP.06.01.301.201 FOR STRUCTURE NUMBERING AND WARNING SIGNS REQUIRED FOR ALL STRUCTURES.
4. STEEL POLE MANUFACTURER DRAWINGS TO SUPERCEDE CONCEPT DRAWINGS AND WILL BE ISSUED FOR CONSTRUCTION AS SOON AS THEY ARE AVAILABLE.

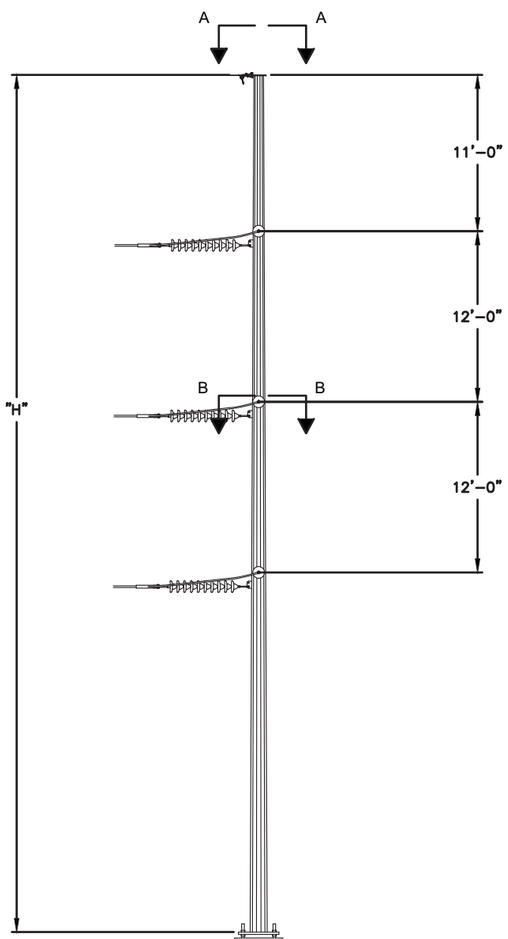

FRONT ELEVATION

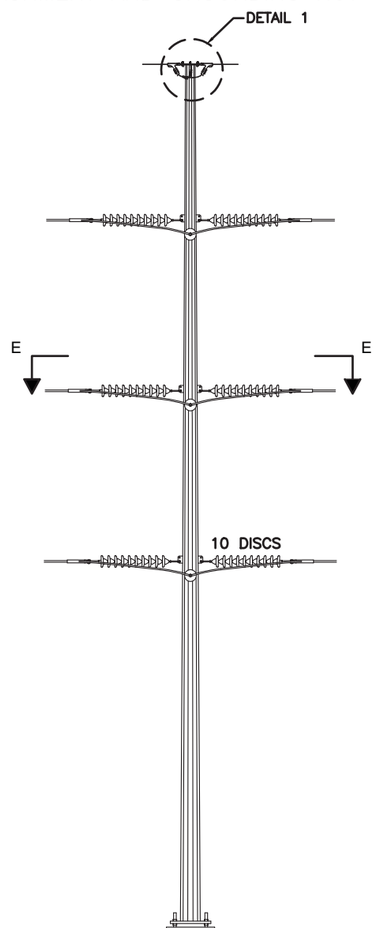

SIDE ELEVATION

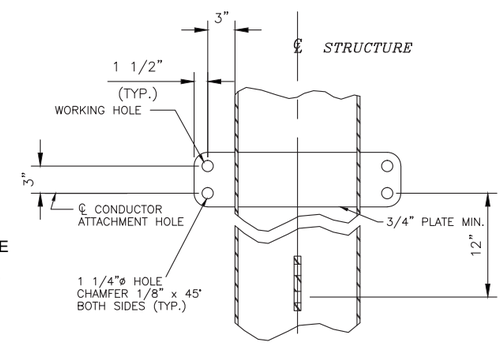

SECTION C–C

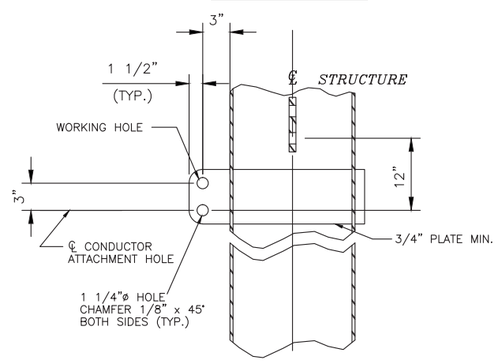

SECTION D–D

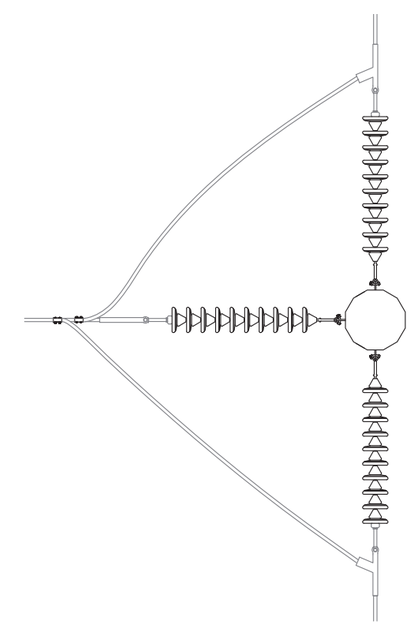

SECTION E–E
CONDUCTOR HARDWARE ASSEMBLY

VER	DATE	VERSION DESCRIPTION	PREPARED/REVIEWED/APPROVED
1	9/19/14	ISSUED FOR SCOPE DOCUMENT	EJJ FTX NPA
2	5/22/15	ISSUED FOR PERMITTING	DD FTX NPA
3	10/31/17	AS–BUILT AND ISSUED FOR NHSEC RECORD	DRD GC NPA
4			
5			
6			
7			

VERSION 3

nationalgrid

PREPARED BY	DD	5/22/15
REVIEWED BY	FTX	5/22/15
APPROVED BY	NPA	5/22/15
SCALE	NTS	
SHEET	1 OF 1	
INDEX	400298	

SCOBIE POND – TEWKSBURY
115KV REPLACEMENT STRUCTURE
SINGLE CIRCUIT Y151 LINE
STEEL SINGLE POLE 3-WAY DE – SINGLE INS. STRING

PRINTED COPIES ARE NOT DOCUMENT CONTROLLED. FOR THE LATEST AUTHORIZED VERSION PLEASE REFER TO THE ENGINEERING DEPARTMENT DOCUMENTS CABINET IN DOCUMENTUM

PRINTED 10/30/2017 1:28 PM

INCHES ON ORIGINAL

400298–C–S–18

CONFIDENTIALITY STATEMENT: THIS DOCUMENT CONTAINS CONFIDENTIAL AND PROPRIETARY INFORMATION OF NATIONAL GRID, IT IS TO BE USED BY AUTHORIZED CONTRACTORS FOR NATIONAL GRID SOLELY IN CONNECTION WITH THE SPECIFIC PROJECT FOR WHICH IT HAS BEEN TRANSMITTED. ANY OTHER USE, ITS TRANSMITTAL TO THIRD PARTIES, OR ITS REPRODUCTION WITHOUT PRIOR EXPRESS WRITTEN AUTHORIZATION OF NATIONAL GRID IS STRICTLY PROHIBITED.

NOTES:
1. SEE WORK LIST FOR POLE HEIGHT AND CLASS
2. SEE SP.06.01.301.201 FOR LINE, STRUCTURE NUMBERING AND WARNING SIGNS REQUIRED ON ALL POLES.
3. SEE SP.06.01.301.401 FOR FOUNDATION SPEC.
4. SLOPE OF HEAD AND BACK GUYS IS 1:1 UNLESS OTHERWISE NOTED IN WORKLIST COMMENTS.

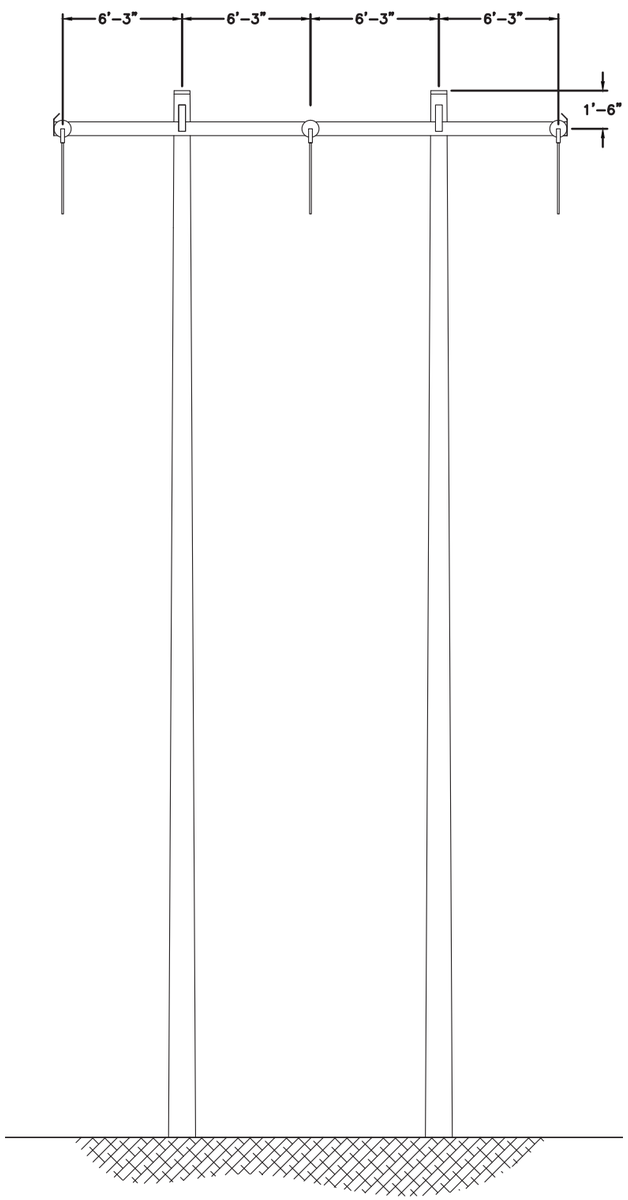

FRONT ELEVATION

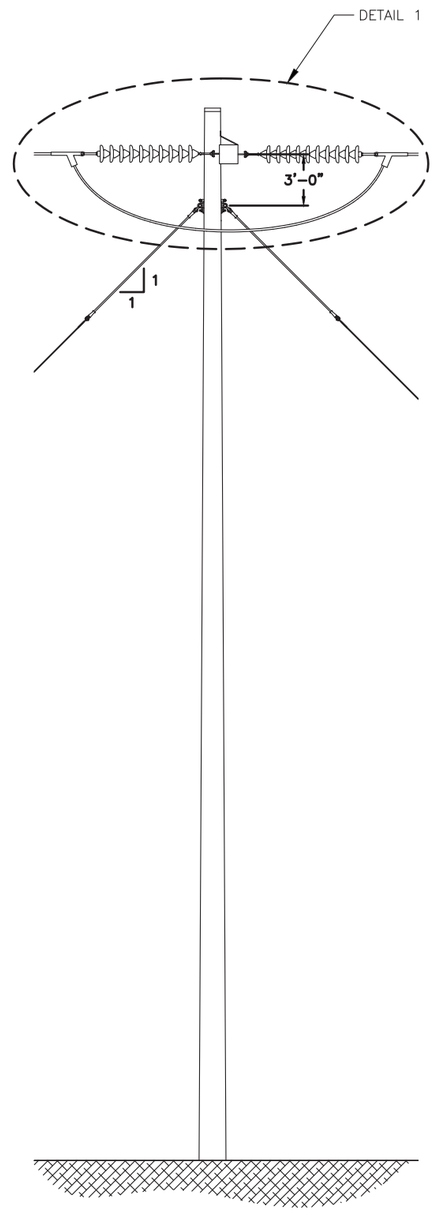

SIDE ELEVATION

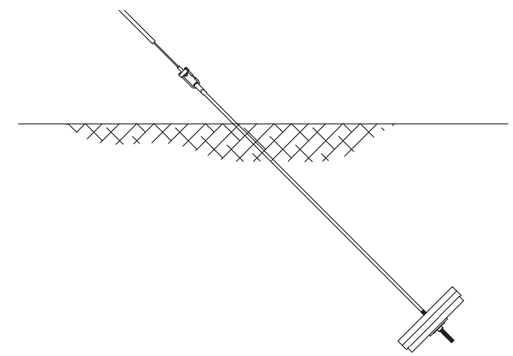

SINGLE GUY
ANCHOR DETAIL

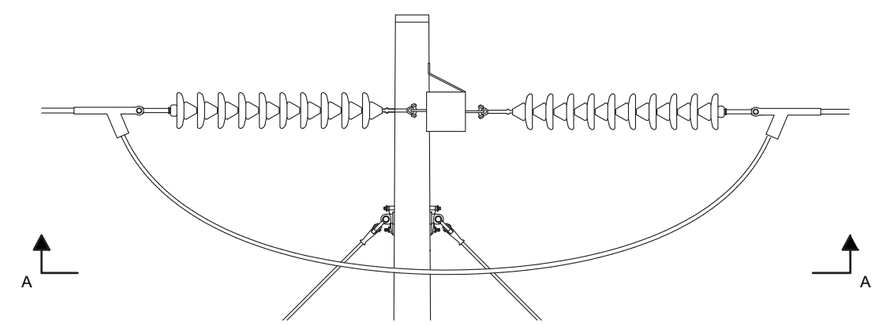

DETAIL 1

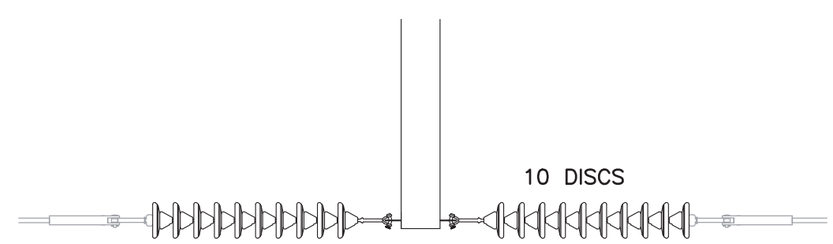

SECTION A-A
CONDUCTOR HARDWARE ASSEMBLY

VER	DATE	VERSION DESCRIPTION	PREPARED BY	REVIEWED BY	APPROVED BY
1	01/30/15	NHSEC PERMIT FILING	RAM	FTX	NPA
2	10/29/15	115KV ST-HFDE REVISED TO 115KV WD-HFDE	KMM	FTX	NPA
3	10/31/17	AS-BUILT AND ISSUED FOR NHSEC RECORD	DRD	GC	NPA
4					
5					
6					
7					

VERSION 3

nationalgrid

PREPARED BY	KMM	10/29/15
REVIEWED BY	FTX	10/29/15
APPROVED BY	NPA	10/29/15
SCALE	N.T.S.	
SHEET	1 OF 1	
INDEX		

SCOBIE POND -TEWKSBURY
115KV REPLACEMENT STRUCTURE
SINGLE CIRCUIT Y151 LINE
WOOD H-FRAME DEADEND SINGLE INSULATOR STRING

PRINTED 10/30/2017 1:34 PM

PRINTED COPIES ARE NOT DOCUMENT CONTROLLED. FOR THE LATEST AUTHORIZED VERSION PLEASE REFER TO THE ENGINEERING DEPARTMENT DOCUMENTS CABINET IN DOCUMENTUM

INCHES ON ORIGINAL

400298-C-S-20

CONFIDENTIALITY STATEMENT: THIS DOCUMENT CONTAINS CONFIDENTIAL AND PROPRIETARY INFORMATION OF NATIONAL GRID. IT IS TO BE USED BY AUTHORIZED CONTRACTORS FOR NATIONAL GRID SOLELY IN CONNECTION WITH THE SPECIFIC PROJECT FOR WHICH IT HAS BEEN TRANSMITTED. ANY OTHER USE, ITS TRANSMITTAL TO THIRD PARTIES, OR ITS REPRODUCTION WITHOUT PRIOR EXPRESS WRITTEN AUTHORIZATION OF NATIONAL GRID IS STRICTLY PROHIBITED.

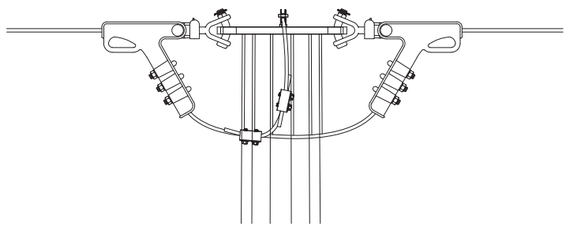

DETAIL 1
SHIELD WIRE ASSEMBLY

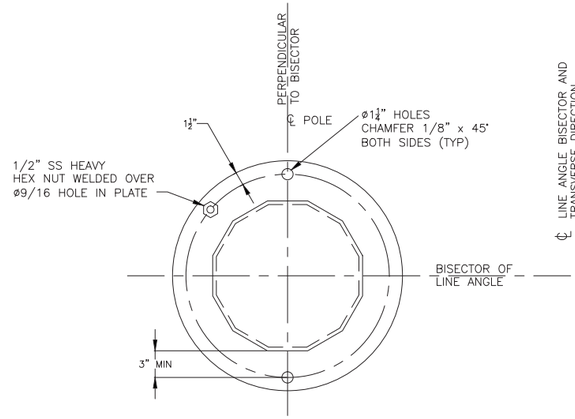

SECTION A–A
POLE CAP WITH SHIELD WIRE
ATTACHMENT AND GROUNDING NUT

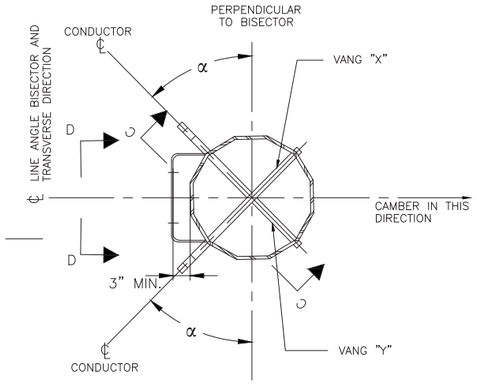

SECTION B–B
(TYP. 3 PLACES)

NOTES:
1. REFER TO WORK LIST FOR POLE HEIGHT.
2. SEE SPECIFICATION SP.06.01.301.101 FOR STRUCTURE GROUNDING DETAILS.
3. SEE SPECIFICATION SP.06.01.301.201 FOR STRUCTURE NUMBERING AND WARNING SIGNS REQUIRED FOR ALL STRUCTURES.
4. STEEL POLE MANUFACTURER DRAWINGS TO SUPERCEDE CONCEPT DRAWINGS AND WILL BE ISSUED FOR CONSTRUCTION AS SOON AS THEY ARE AVAILABLE.

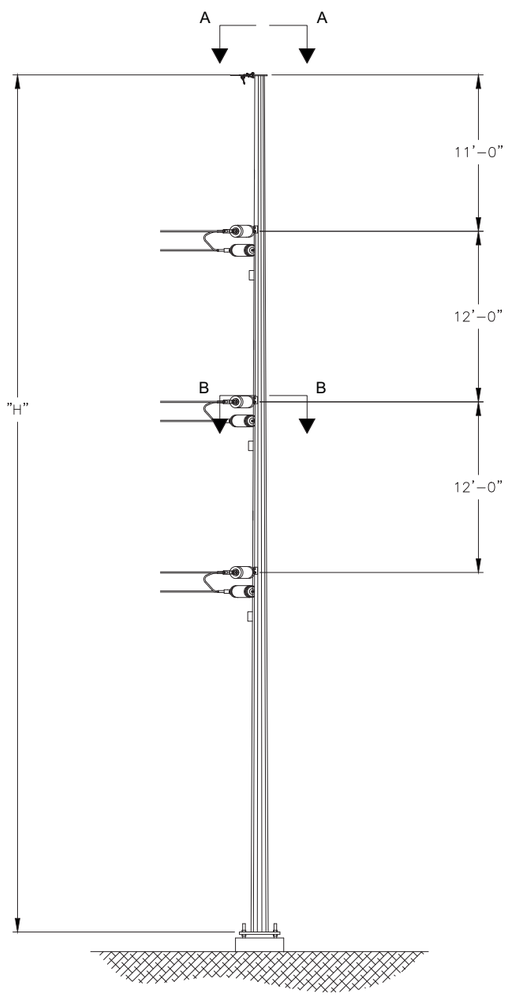

FRONT ELEVATION

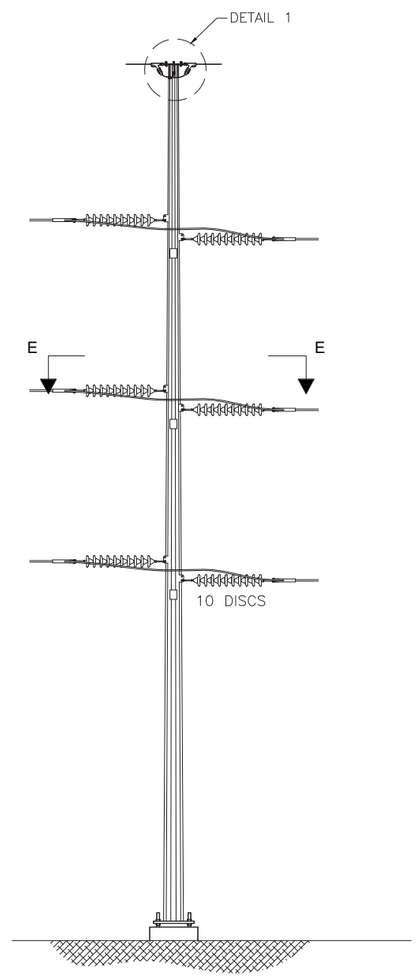

SIDE ELEVATION

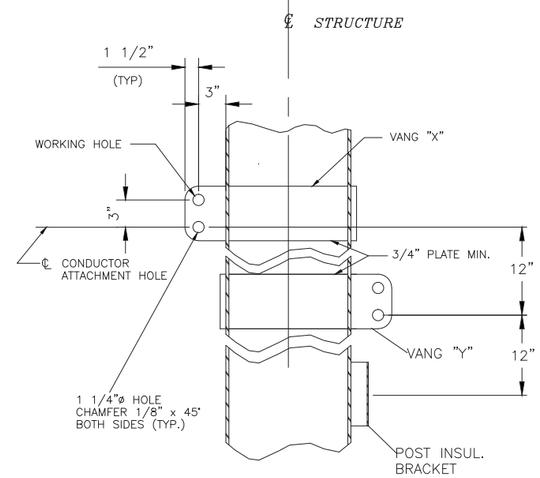

SECTION C–C

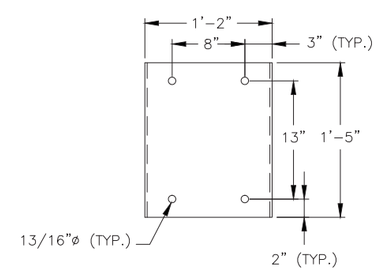

SECTION D–D
POST INSULATOR BRACKET
FOR JUMPER LOOP

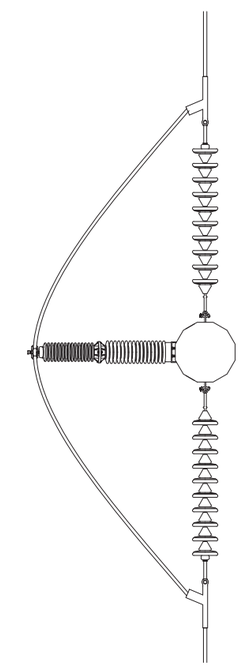

SECTION E–E
CONDUCTOR HARDWARE ASSEMBLY

VER	DATE	VERSION DESCRIPTION	PREPARED/REVIEWED/APPROVED
1	2/27/15	ISSUED FOR SCOPE DOCUMENT	RAM FTX NPA
2	10/31/17	AS–BUILT AND ISSUED FOR NHSEC RECORD	DRD GC NPA
3			
4			
5			
6			
7			

VERSION 2

nationalgrid

PREPARED BY	RAM	2/27/15
REVIEWED BY	FTX	2/27/15
APPROVED BY	NPA	2/27/15
SCALE	NTS	
SHEET	1 OF 1	
INDEX	400298	

SCOBIE POND – TEWKSBURY
115KV REPLACEMENT STRUCTURE
SINGLE CIRCUIT Y151 LINE
STEEL SINGLE POLE – SINGLE INS. STRING

PRINTED COPIES ARE NOT DOCUMENT CONTROLLED. FOR THE LATEST AUTHORIZED VERSION PLEASE REFER TO THE ENGINEERING DEPARTMENT DOCUMENTS CABINET IN DOCUMENTUM

PRINTED 10/30/2017 10:43 AM

INCHES ON ORIGINAL

CONFIDENTIALITY STATEMENT: THIS DOCUMENT CONTAINS CONFIDENTIAL AND PROPRIETARY INFORMATION OF NATIONAL GRID. IT IS TO BE USED BY AUTHORIZED CONTRACTORS FOR NATIONAL GRID SOLELY IN CONNECTION WITH THE SPECIFIC PROJECT FOR WHICH IT HAS BEEN TRANSMITTED. ANY OTHER USE, ITS TRANSMITTAL TO THIRD PARTIES, OR ITS REPRODUCTION WITHOUT PRIOR EXPRESS WRITTEN AUTHORIZATION OF NATIONAL GRID IS STRICTLY PROHIBITED.

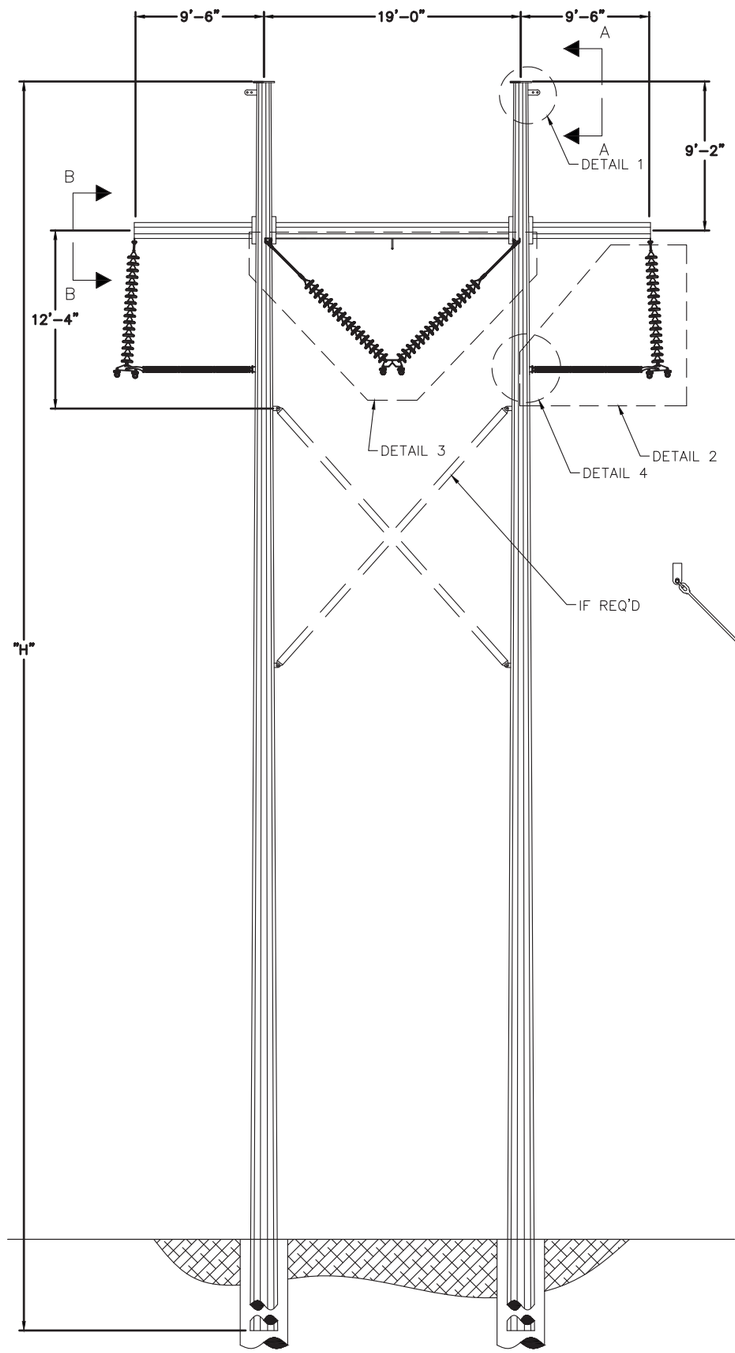

FRONT ELEVATION

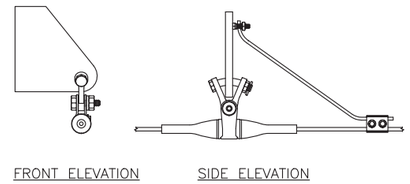

DETAIL 1
SHIELD WIRE ASSEMBLY
(TYPICAL 2 PLACES)

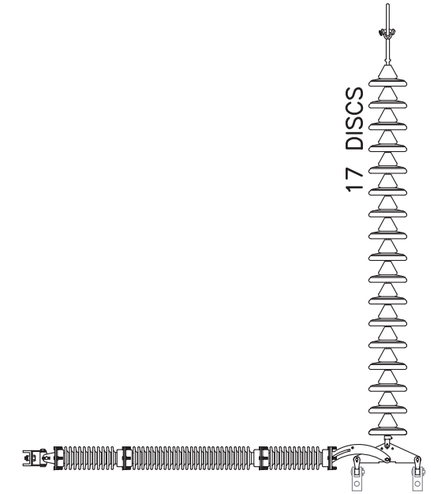

DETAIL 2
RESTRAINED SUSPENSION
INSULATOR
SINGLE STRING
(TYPICAL 3 PLACES)

DETAIL 3
RESTRAINED SUSPENSION
INSULATOR
SINGLE STRING – VEE STRING

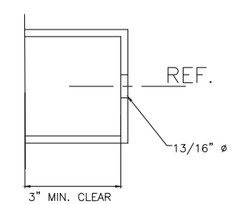

DETAIL 4
STRUT INSULATOR CLIP
(TYPICAL 3 LOCATIONS –
RESTRAINED SUSPENSION ONLY)

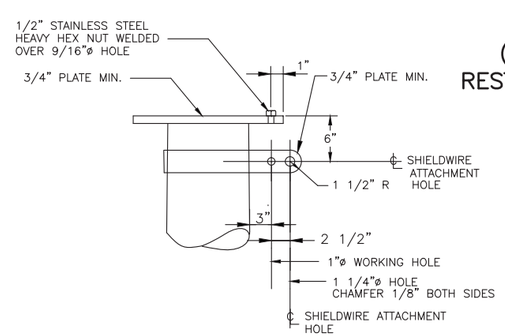

SECTION A–A
SHIELD WIRE SUSPENSION VANG
(TYPICAL 2 PLACES)

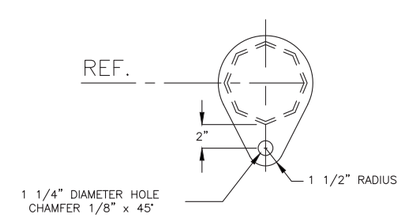

SECTION B–B
CONDUCTOR SUSPENSION VANG
(TYPICAL 3 PLACES)

NOTES:
1. REFER TO WORK LIST FOR POLE HEIGHT.
2. SEE SPECIFICATION SP.06.01.301.101 FOR STRUCTURE GROUNDING DETAILS.
3. SEE SPECIFICATION SP.06.01.301.201 FOR STRUCTURE NUMBERING AND WARNING SIGNS REQUIRED FOR ALL STRUCTURES.
4. STEEL POLE MANUFACTURER DRAWINGS TO SUPERCEDE CONCEPT DRAWINGS AND WILL BE ISSUED FOR CONSTRUCTION AS SOON AS THEY ARE AVAILABLE.

VERSION 2

PREPARED/REVIEWED/APPROVED
EJJ FTX NPA
DRD GC NPA

VER	DATE	VERSION DESCRIPTION
1	9/19/14	ISSUED FOR SCOPE DOCUMENT
2	10/31/17	AS–BUILT AND ISSUED FOR NHSEC RECORD
3		
4		
5		
6		
7		

nationalgrid

PREPARED BY	EJJ	9/19/14
REVIEWED BY	FTX	9/19/14
APPROVED BY	NPA	9/19/14
SCALE	N.T.S.	
SHEET	1 OF 1	
INDEX	400298	

SCOBIE POND – TEWKSBURY
345KV NEW STRUCTURE
SINGLE CIRCUIT 3124 LINE STEEL
H–FRAME SUSPENSION – RESTRAINED
INSULATOR ASSEMBLY

PRINTED 10/30/2017 1:40 PM
PRINTED COPIES ARE NOT DOCUMENT CONTROLLED. FOR THE LATEST AUTHORIZED VERSION PLEASE REFER TO THE ENGINEERING DEPARTMENT DOCUMENTS CABINET IN DOCUMENTUM

INCHES ON ORIGINAL

400298-C-S-52

CONFIDENTIALITY STATEMENT: THIS DOCUMENT CONTAINS CONFIDENTIAL AND PROPRIETARY INFORMATION OF NATIONAL GRID. IT IS TO BE USED BY AUTHORIZED CONTRACTORS FOR NATIONAL GRID SOLELY IN CONNECTION WITH THE SPECIFIC PROJECT FOR WHICH IT HAS BEEN TRANSMITTED. ANY OTHER USE, ITS TRANSMITTAL TO THIRD PARTIES, OR ITS REPRODUCTION WITHOUT PRIOR EXPRESS WRITTEN AUTHORIZATION OF NATIONAL GRID IS STRICTLY PROHIBITED.

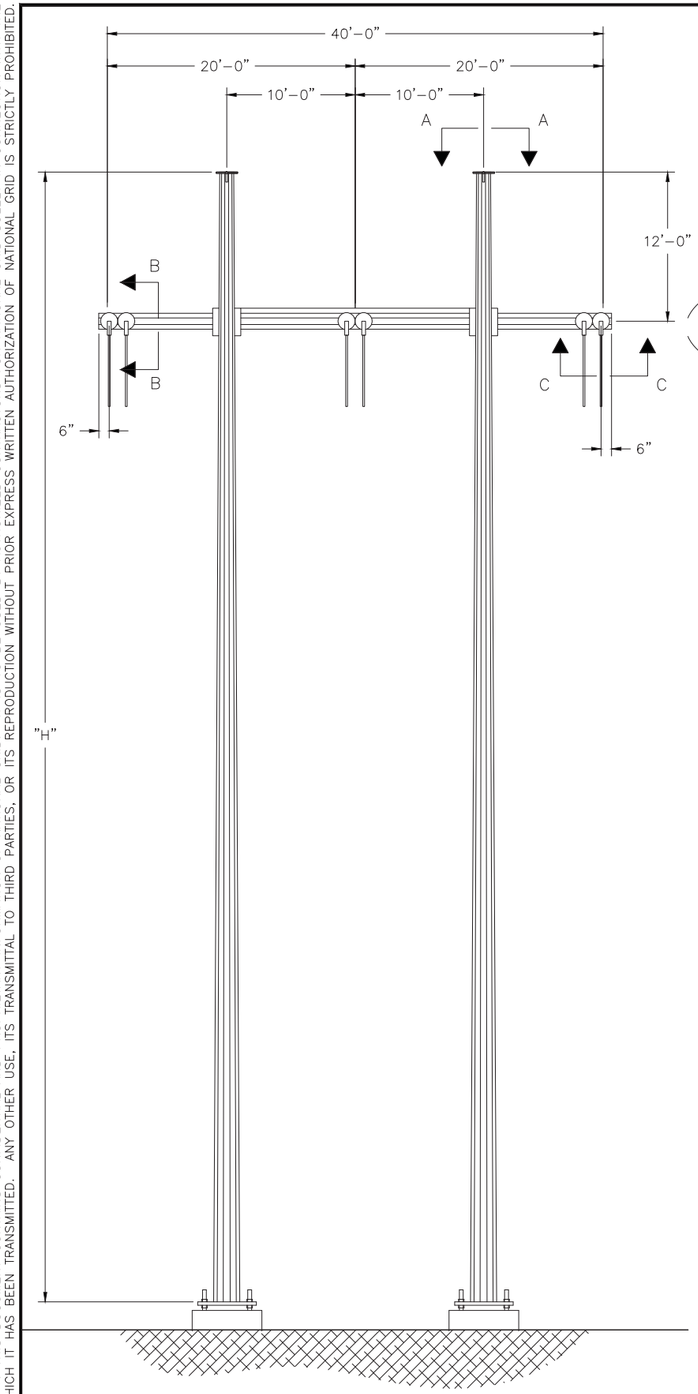

FRONT ELEVATION

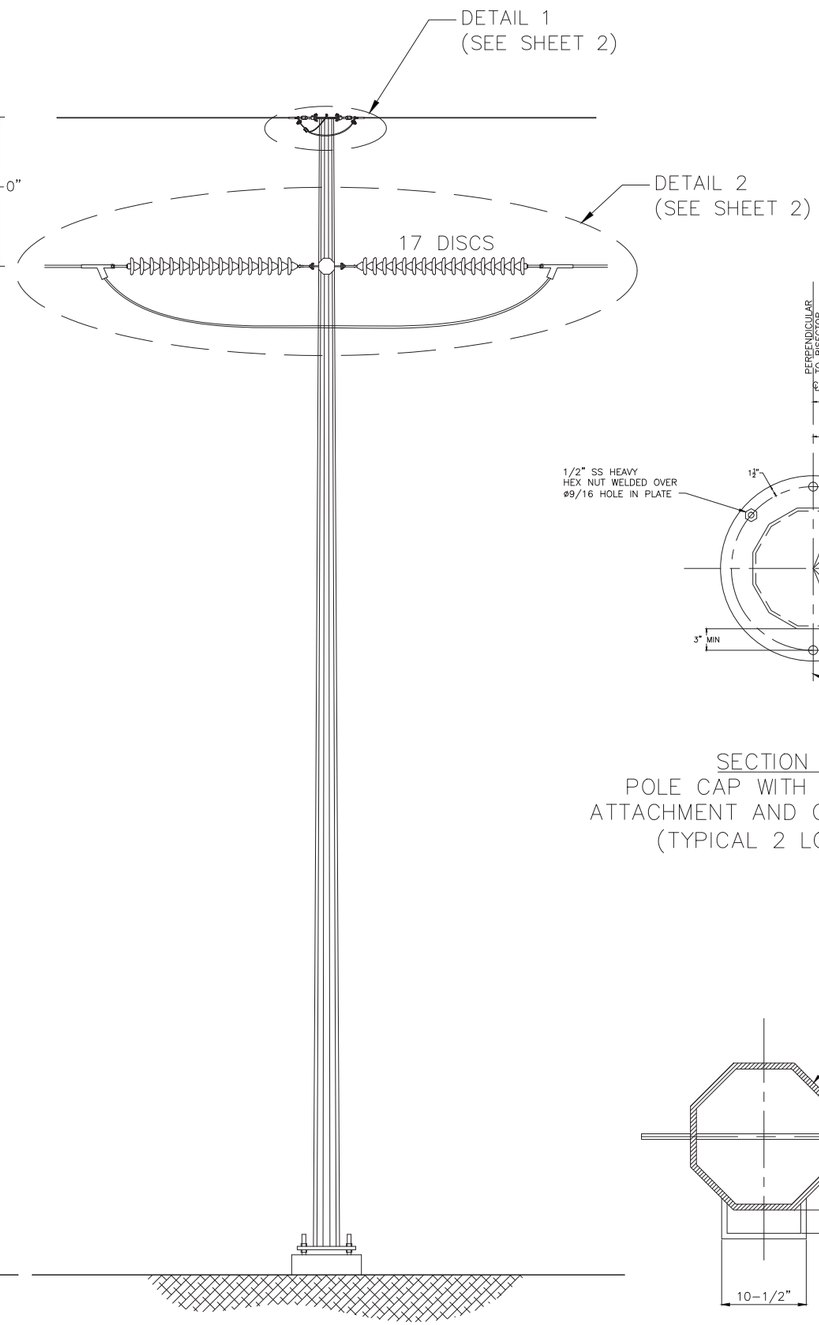

SIDE ELEVATION

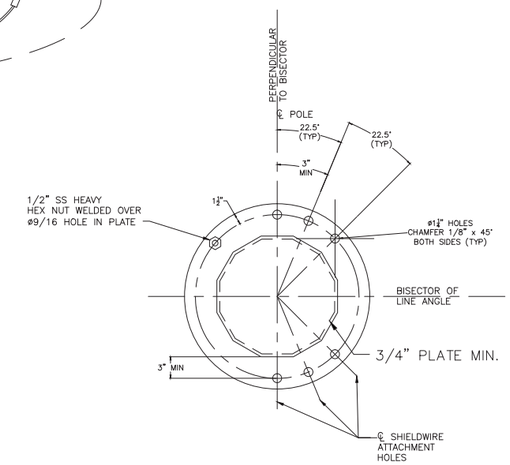

SECTION A–A
POLE CAP WITH SHIELD WIRE ATTACHMENT AND GROUNDING NUT
(TYPICAL 2 LOCATIONS)

NOTES:
1. REFER TO WORK LIST FOR POLE HEIGHT.
2. SEE SPECIFICATION SP.06.01.301.101 FOR STRUCTURE GROUNDING DETAILS.
3. SEE SPECIFICATION SP.06.01.301.201 FOR STRUCTURE NUMBERING AND WARNING SIGNS REQUIRED FOR ALL STRUCTURES.
4. STEEL POLE MANUFACTURER DRAWINGS TO SUPERCEDE CONCEPT DRAWINGS AND WILL BE ISSUED FOR CONSTRUCTION AS SOON AS THEY ARE AVAILABLE.

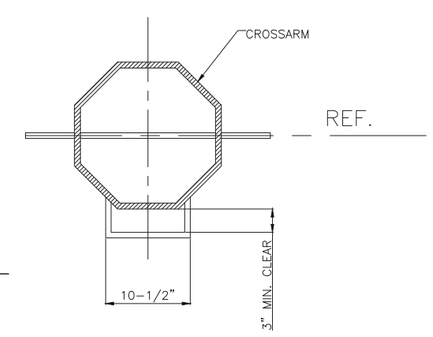

SECTION B–B
CONDUCTOR ATTACHMENT PLATE AND POST INSULATOR ATTACHMENT PLATE
(TYPICAL 3 LOCATIONS)

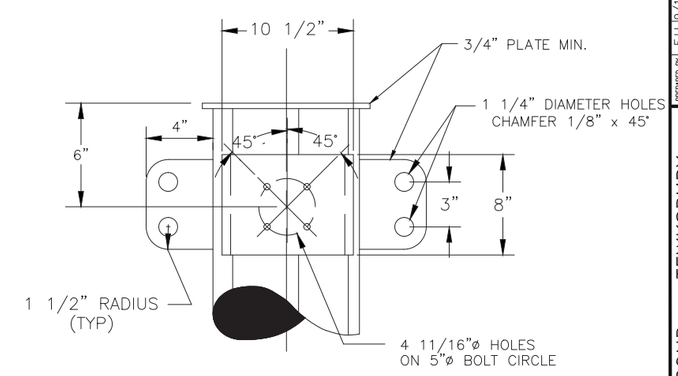

SECTION C–C
CONDUCTOR ATTACHMENT PLATE AND POST INSULATOR ATTACHMENT PLATE
(TYPICAL 3 LOCATIONS)

VER	DATE	VERSION DESCRIPTION	PREPARED BY	REVIEWED BY	APPROVED BY
1	9/9/14	ISSUED FOR SCOPE DOCUMENT	EJJ	FTX	NPA
2	10/31/17	AS-BUILT AND ISSUED FOR NHSEC RECORD	FTX	FTX	NPA
3			DRD	GC	NPA
4					
5					
6					
7					

VERSION 2

nationalgrid

SCOBIE POND – TEWKSBURY
345KV NEW STRUCTURE
SINGLE CIRCUIT 3124 LINE STEEL H-FRAME
DEADEND (0 TO 10) DOUBLE INSULATOR ASSEMBLY

PREPARED BY	EJJ	9/19/14
REVIEWED BY	FTX	9/19/14
APPROVED BY	NPA	9/19/14
SCALE	N.T.S.	
SHEET	1 OF 2	
INDEX	400298	

PRINTED 12/12/2017 7:23 PM

PRINTED COPIES ARE NOT DOCUMENT CONTROLLED. FOR THE LATEST AUTHORIZED VERSION PLEASE REFER TO THE ENGINEERING DEPARTMENT DOCUMENTS CABINET IN DOCUMENTUM

INCHES ON ORIGINAL

400298-C-S-52

400298-C-S-52

CONFIDENTIALITY STATEMENT: THIS DOCUMENT CONTAINS CONFIDENTIAL AND PROPRIETARY INFORMATION OF NATIONAL GRID. IT IS TO BE USED BY AUTHORIZED CONTRACTORS FOR NATIONAL GRID SOLELY IN CONNECTION WITH THE SPECIFIC PROJECT FOR WHICH IT HAS BEEN TRANSMITTED. ANY OTHER USE, ITS TRANSMITTAL TO THIRD PARTIES, OR ITS REPRODUCTION WITHOUT PRIOR EXPRESS WRITTEN AUTHORIZATION OF NATIONAL GRID IS STRICTLY PROHIBITED.

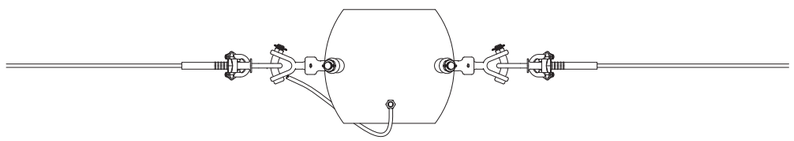

PLAN VIEW

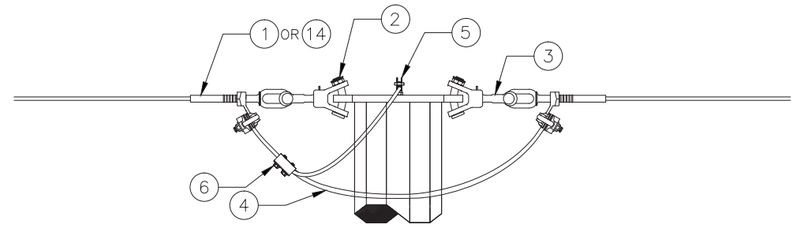

SIDE ELEVATION

DETAIL 1
SHIELD WIRE ASSEMBLY
(TYPICAL 2 PLACES)

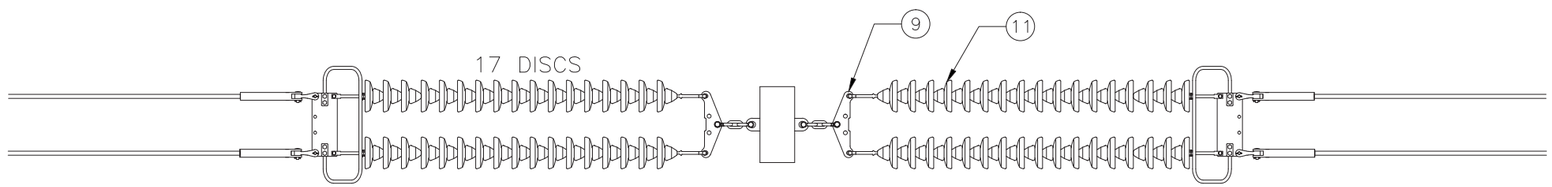

PLAN VIEW

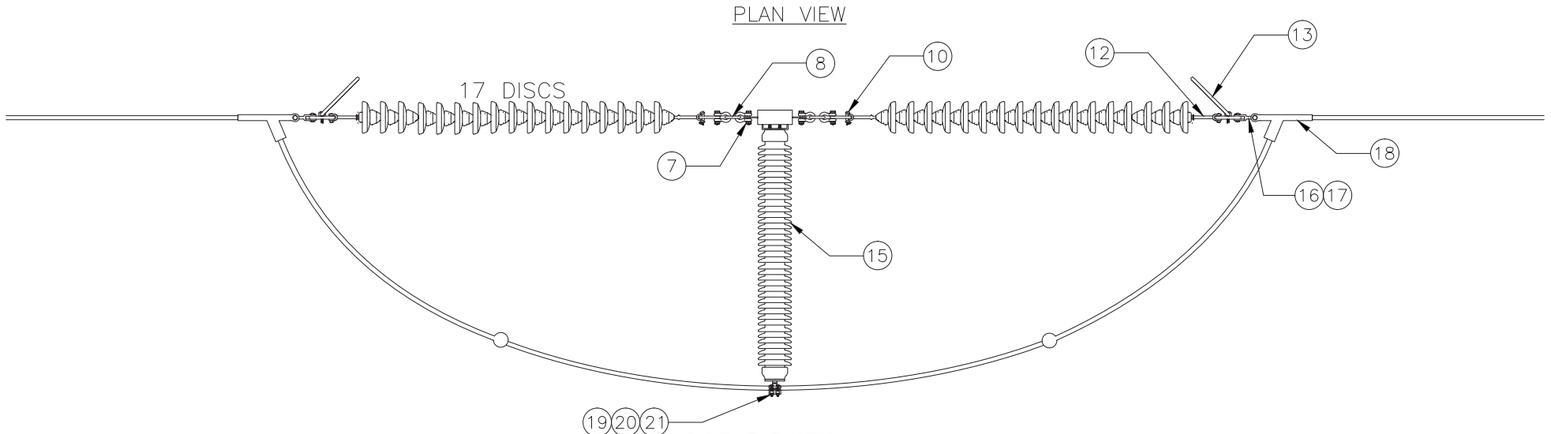

SIDE ELEVATION

DETAIL 2
CONDUCTOR HARDWARE
ASSEMBLY
(TYPICAL 2 PLACES)

NOTES:
1. GENERAL NOTES AS PER SHEET 1.

VER	DATE	VERSION DESCRIPTION	PREPARED BY	REVIEWED BY	APPROVED BY
1	9/9/14	ISSUED FOR SCOPE DOCUMENT	EJ	FTX	NPA
2	10/31/17	AS-BUILT AND ISSUED FOR NHSEC RECORD	EJ	FTX	NPA
3			DRD	GC	NPA
4					
5					
6					
7					

VERSION 2

nationalgrid

SCOBIE POND – TEWKSBURY
345KV NEW STRUCTURE
SINGLE CIRCUIT 3124 LINE STEEL H-FRAME
DEADEND (0 TO 10) DOUBLE INSULATOR ASSEMBLY

PREPARED BY	EJ	9/19/14
REVIEWED BY	FTX	9/19/14
APPROVED BY	NPA	9/19/14
SCALE	N.T.S.	
SHEET	2 OF 2	
INDEX	400298	

PRINTED COPIES ARE NOT DOCUMENT CONTROLLED. FOR THE LATEST AUTHORIZED VERSION PLEASE REFER TO THE ENGINEERING DEPARTMENT DOCUMENTS CABINET IN DOCUMENTIUM

PRINTED 12/12/2017 7:24 PM

400298-C-S-53

CONFIDENTIALITY STATEMENT: THIS DOCUMENT CONTAINS CONFIDENTIAL AND PROPRIETARY INFORMATION OF NATIONAL GRID. IT IS TO BE USED BY AUTHORIZED CONTRACTORS FOR NATIONAL GRID SOLELY IN CONNECTION WITH THE SPECIFIC PROJECT FOR WHICH IT HAS BEEN TRANSMITTED. ANY OTHER USE, ITS TRANSMITTAL TO THIRD PARTIES, OR ITS REPRODUCTION WITHOUT PRIOR EXPRESS WRITTEN AUTHORIZATION OF NATIONAL GRID IS STRICTLY PROHIBITED.

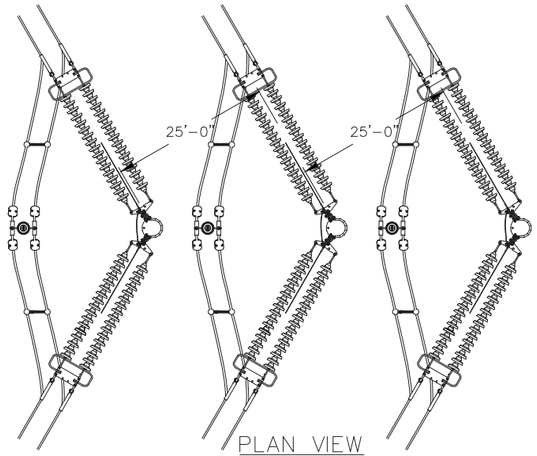

PLAN VIEW

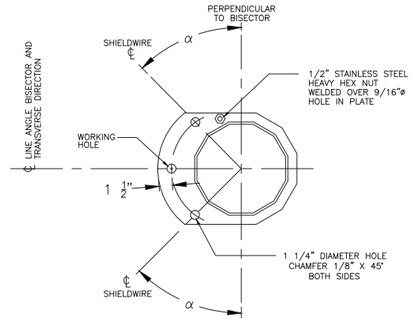

SECTION A–A
POLE CAP WITH SHIELD WIRE ATTACHMENT AND GROUNDING NUT

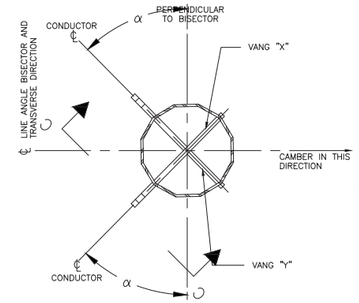

SECTION B–B

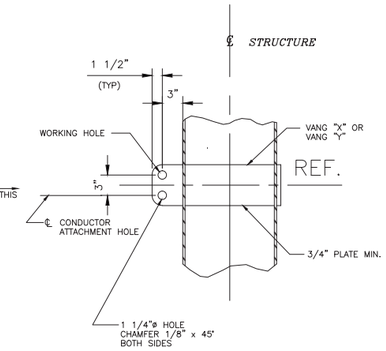

SECTION C–C

NOTES:
1. REFER TO WORK LIST FOR POLE HEIGHT.
2. SEE SPECIFICATION SP.06.01.301.101 FOR STRUCTURE GROUNDING DETAILS.
3. SEE SPECIFICATION SP.06.01.301.201 FOR STRUCTURE NUMBERING AND WARNING SIGNS REQUIRED FOR ALL STRUCTURES.
4. STEEL POLE MANUFACTURER DRAWINGS TO SUPERCEDE CONCEPT DRAWINGS AND WILL BE ISSUED FOR CONSTRUCTION AS SOON AS THEY ARE AVAILABLE.

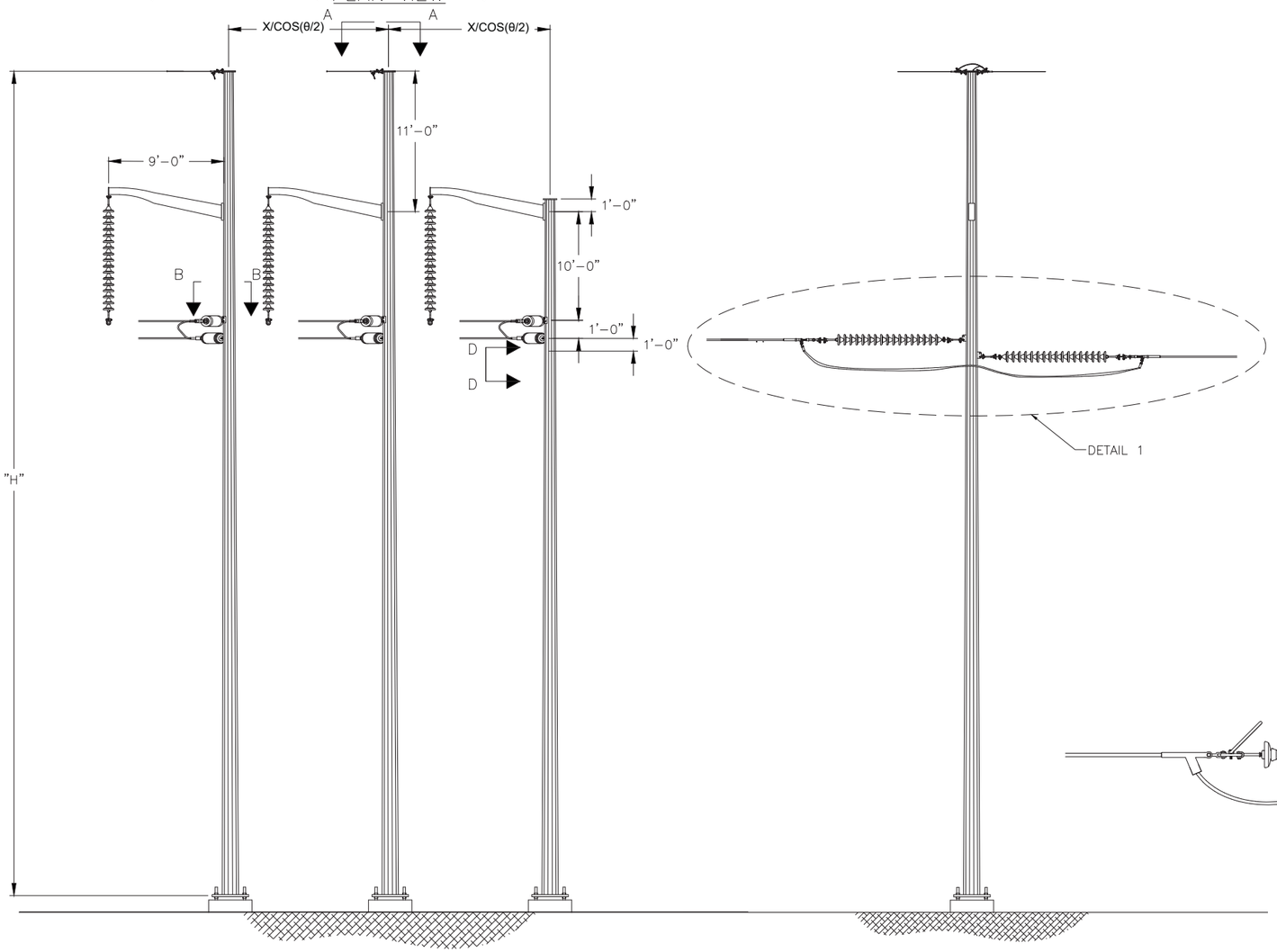

FRONT ELEVATION

SIDE ELEVATION

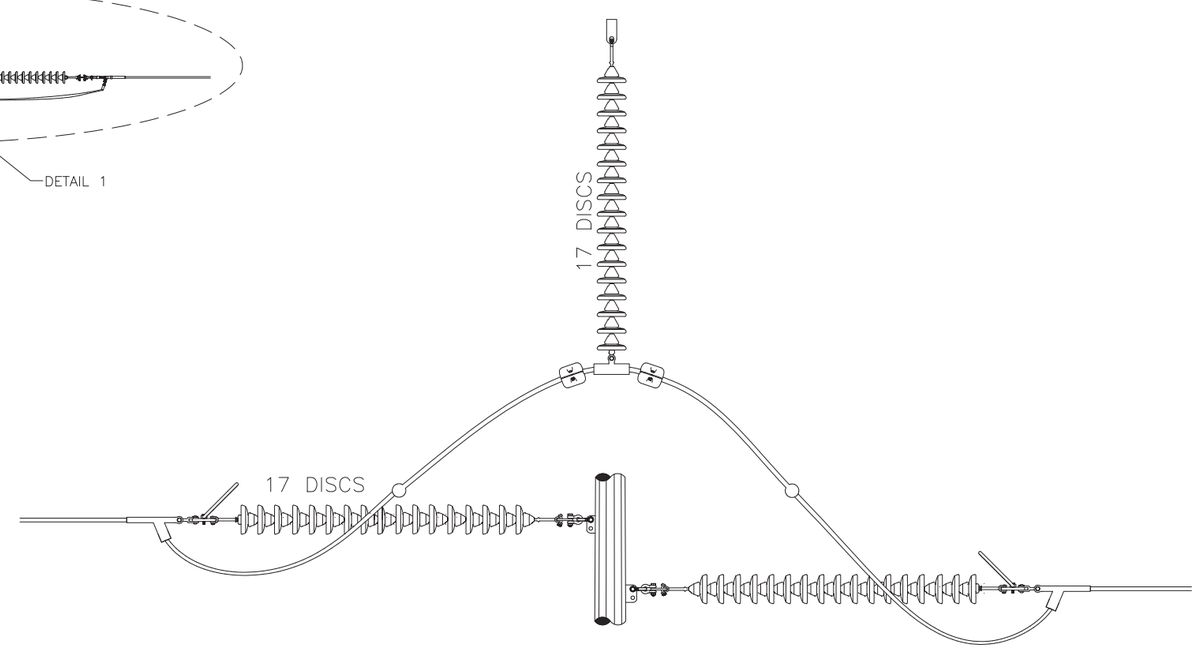

DETAIL 1
CONDUCTOR HARDWARE ASSEMBLY

VER	DATE	VERSION DESCRIPTION	PREPARED/REVIEWED/APPROVED
1	9/19/14	ISSUED FOR SCOPE DOCUMENT	EJJ FTX NPA
2	10/31/17	AS-BUILT AND ISSUED FOR NHSEC RECORD	DRD GC NPA
3			
4			
5			
6			
7			

VERSION 2

nationalgrid

PREPARED BY	EJJ	9/19/14
REVIEWED BY	FTX	9/19/14
APPROVED BY	NPA	9/19/14
SCALE	N.T.S.	
SHEET	1 OF 1	
INDEX	400298	

SCOBIE POND – TEWKSBURY
345KV NEW STRUCTURE
SINGLE SIRCUIT 3124 LINE STEEL
3 POLE DEADEND – DOUBLE INSULATOR ASSEMBLY

PRINTED 10/30/2017 10:44 AM

PRINTED COPIES ARE NOT DOCUMENT CONTROLLED. FOR THE LATEST AUTHORIZED VERSION PLEASE REFER TO THE ENGINEERING DEPARTMENT DOCUMENTS CABINET IN DOCUMENTUM

INCHES ON ORIGINAL

400298-C-S-54

CONFIDENTIALITY STATEMENT: THIS DOCUMENT CONTAINS CONFIDENTIAL AND PROPRIETARY INFORMATION OF NATIONAL GRID. IT IS TO BE USED BY AUTHORIZED CONTRACTORS FOR NATIONAL GRID SOLELY IN CONNECTION WITH THE SPECIFIC PROJECT FOR WHICH IT HAS BEEN TRANSMITTED. ANY OTHER USE, ITS TRANSMITTAL TO THIRD PARTIES, OR ITS REPRODUCTION WITHOUT PRIOR EXPRESS WRITTEN AUTHORIZATION OF NATIONAL GRID IS STRICTLY PROHIBITED.

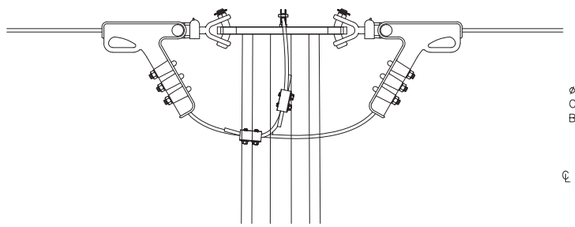

DETAIL 1
SHIELD WIRE ASSEMBLY

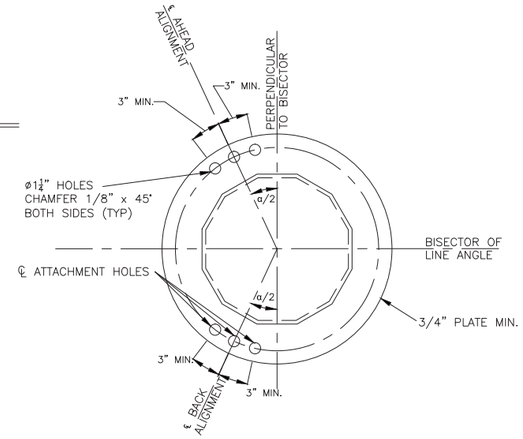

SECTION A–A
POLE CAP WITH SHIELD WIRE
ATTACHMENT AND GROUNDING NUT

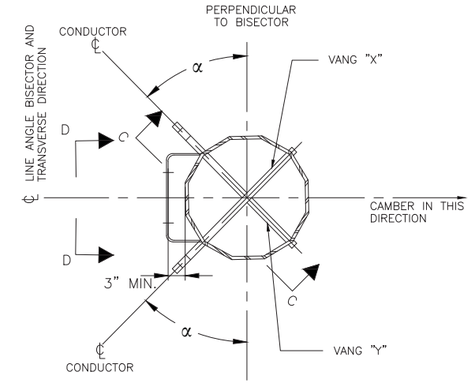

SECTION B–B
(TYP. 3 PLACES)

NOTES:
1. REFER TO WORK LIST FOR POLE HEIGHT.
2. SEE SPECIFICATION SP.06.01.301.101 FOR STRUCTURE GROUNDING DETAILS.
3. SEE SPECIFICATION SP.06.01.301.201 FOR STRUCTURE NUMBERING AND WARNING SIGNS REQUIRED FOR ALL STRUCTURES.
4. STEEL POLE MANUFACTURER DRAWINGS TO SUPERCEDE CONCEPT DRAWINGS AND WILL BE ISSUED FOR CONSTRUCTION AS SOON AS THEY ARE AVAILABLE.

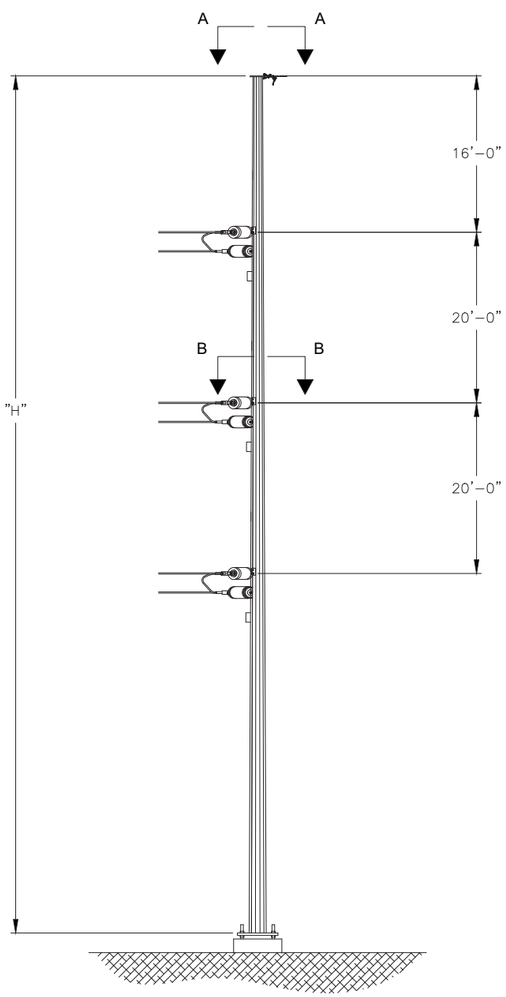

FRONT ELEVATION

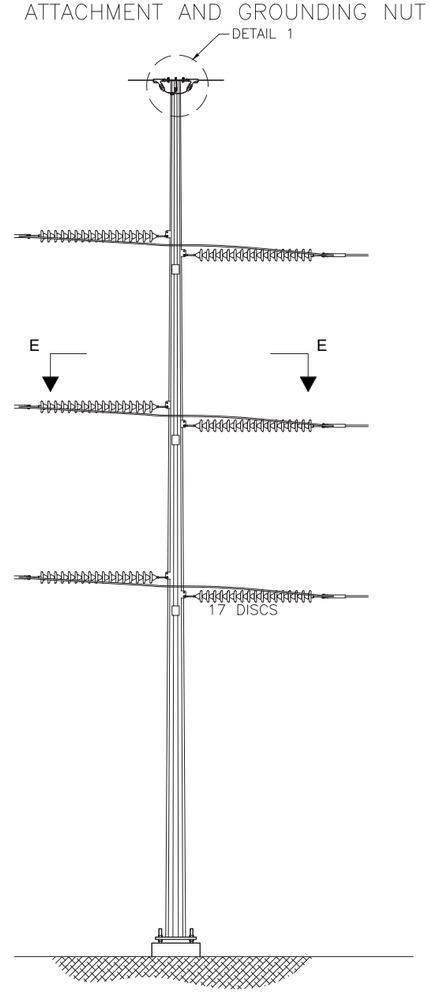

SIDE ELEVATION

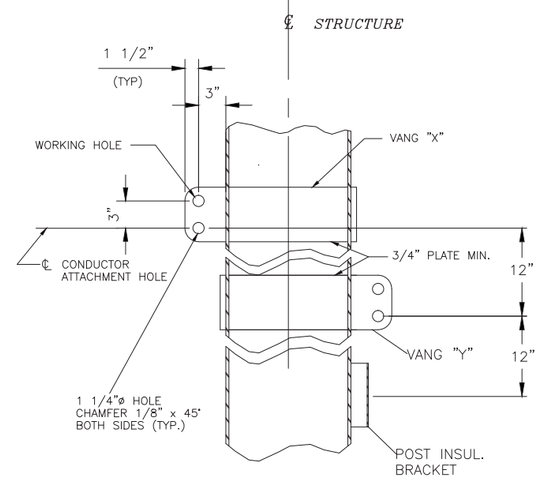

SECTION C–C

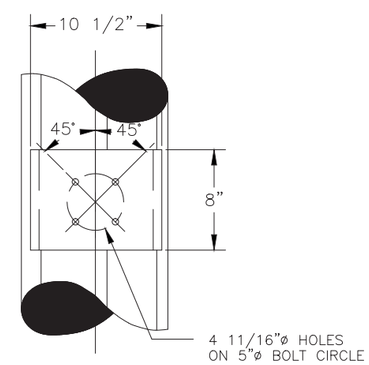

SECTION D–D
POST INSULATOR BRACKET
FOR JUMPER LOOP

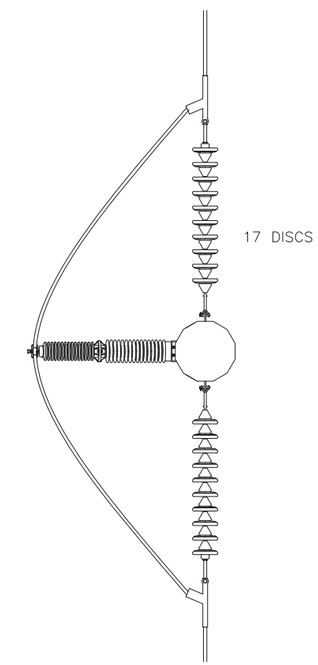

SECTION E–E
CONDUCTOR HARDWARE ASSEMBLY

VER	DATE	VERSION DESCRIPTION	PREPARED/REVIEWED/APPROVED
1	5/22/15	ISSUED FOR PERMITTING	ULM FTX NPA
2	10/31/17	AS–BUILT AND ISSUED FOR NHSEC RECORD	DRD GC NPA
3			
4			
5			
6			
7			

VERSION 2

nationalgrid

PREPARED BY	RAM	5/22/15
REVIEWED BY	FTX	5/22/15
APPROVED BY	NPA	5/22/15
SCALE	NTS	
SHEET	1 OF 1	
INDEX	400298	

SCOBIE POND – TEWKSBURY
345KV NEW STRUCTURE
SINGLE CIRCUIT 3124 LINE
STEEL SINGLE POLE DEADEND
DOUBLE INSULATOR ASSEMBLY

PRINTED COPIES ARE NOT DOCUMENT CONTROLLED. FOR THE LATEST AUTHORIZED VERSION PLEASE REFER TO THE ENGINEERING DEPARTMENT DOCUMENTS CABINET IN DOCUMENTUM

PRINTED 10/30/2017 10:44 AM

INCHES ON ORIGINAL

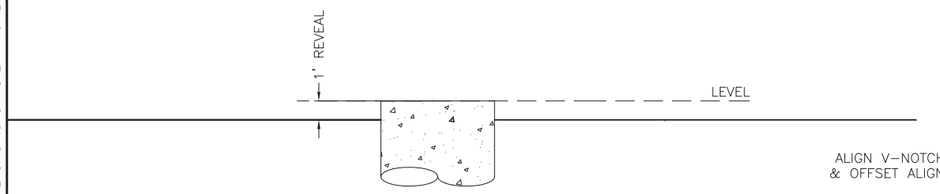

FOUNDATION REVEAL
LOOKING TOWARDS DRACUT JUNCTION
$\frac{1}{4}$" = 1'-0"

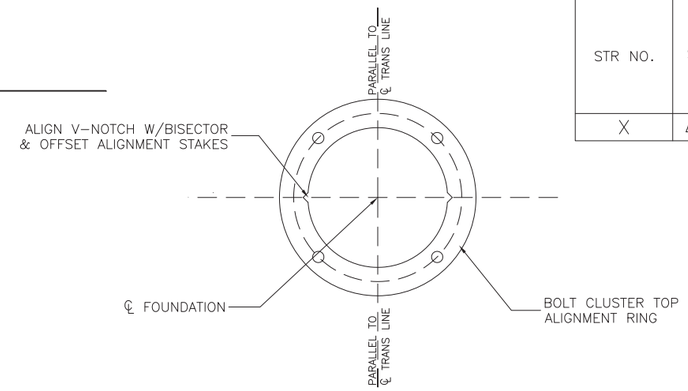

ANCHOR BOLT CLUSTER ORIENTATION
($\frac{3}{4}$" = 1'-0")

FOUNDATION DETAILS PER PIER

STR NO.	STR TYPE	LINE ANGLE Δ	PIER DIMENSIONS			ANCHOR BOLT CIRCLE DIA (IN)	NO. OF BOLTS	"NEAT-LINE" CONCRETE VOLUME (CU YD)	ANCHOR BOLT CLUSTER WEIGHT (LBS)
			LGTH (FT)	MIN EMBED (FT)	DIA (FT)				
X	ΔDA SUSP	0.00	14'-0"	13'-0"	6'-0"	2'-11 1/2"	4	14.66	712.00

REINFORCING BAR SCHEDULE PER PIER

STR NO.	TYPE	QUANTITY	SIZE	SPACING	LAP LENGTH	DIA (FT)	LENGTH (FT)	WEIGHT (LBS)
56R	VERTICAL	14	#11	13.5"			13'-6"	1004
	HOOPS	15	#5		2'-0"	5'-0"	18'-3"	286

NOTES:
1. REINFORCING STEEL SHALL BE ASTM A615, GRADE 60.
2. COMPRESSIVE STRENGTH OF CONCRETE SHALL BE 4000 PSI (MINIMUM) AT 28 DAYS.
3. ALL WORK SHALL CONFORM TO ACI 318 AND 336 BUILDING CODE REQUIREMENTS FOR REINFORCED CONCRETE.
4. EXPOSED CONCRETE ABOVE GRADE SHALL BE FORMED FINISHED.
5. ANCHOR BOLT CLUSTERS SHALL BE BONDED TO REBAR CAGE PER DRAWING SP.06.01.301.101 SHEET 1.
6. ANCHOR BOLT CLUSTERS SHALL BE POSITIONED IN THE CULVERT OR FORM PRIOR TO PLACING CONCRETE ABOVE THE LEVEL OF THE LOWER ANCHOR ALIGNMENT RING.
7. ANCHOR BOLT CLUSTERS SHALL BE SET PLUMB.
8. ALL WORK SHALL CONFORM TO THE PROJECT CONSTRUCTION SPECIFICATION.
9. SEE DRAWING 400298-D-F-XX FOR ANCHOR BOLT CLUSTER DETAIL.
10. SEE DRAWING 400298-D-E-XX FOR SOIL BORING LOGS.
11. SEE DRAWING 400298-C-K-XX FOR STRUCTURE STAKING DIAGRAM.
12. SOIL OR ROCK CONDITIONS: WHERE SOIL DEPTHS, DEPTHS TO BEDROCK OR CONDITIONS OF THE SOIL OR BEDROCK DIFFER FROM THAT SHOWN ON THE BORING, THE ENGINEER SHALL BE CONTACTED.
13. COMMON OR SELECT BACKFILL (DEFINED PER THE CONSTRUCTION SPECIFICATION) SHALL BE PLACED AROUND THE OUTSIDE OF THE CULVERT. BACKFILL SHALL BE THOROUGHLY TAMPED USING MECHANICAL TAMPERS IN LAYERS NOT EXCEEDING 12 INCHES IN DEPTH.
14. DISCARD ANCHOR BOLT ALIGNMENT RING AFTER CONCRETE SETS.

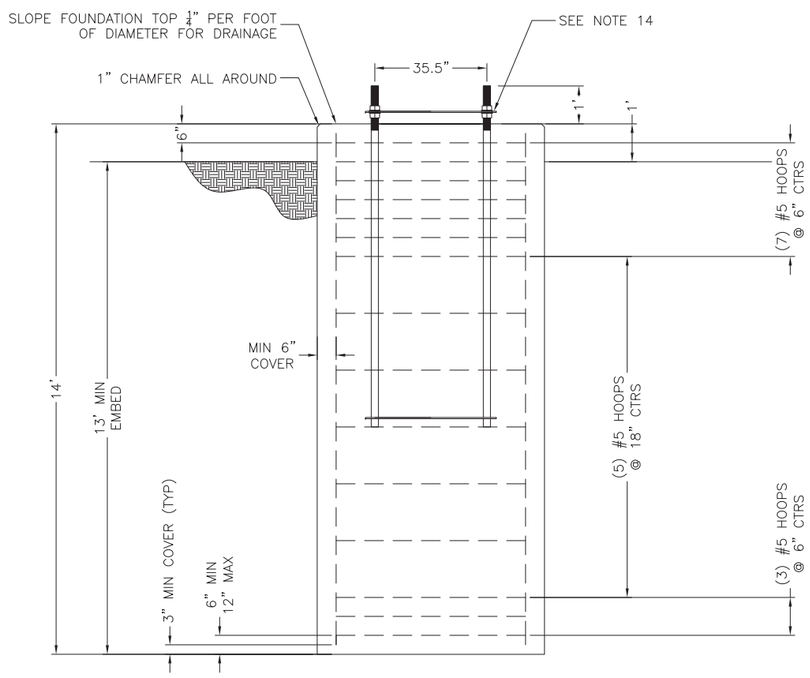

DRILLED PIER FOUNDATION
ELEVATION VIEW
$\frac{1}{2}$" = 1'-0"

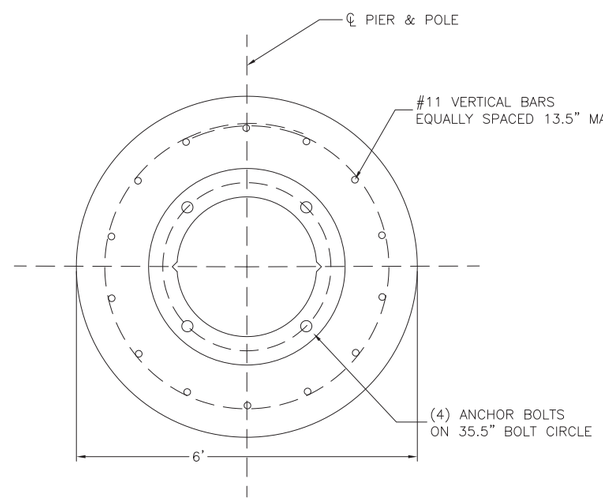

FOUNDATION PLAN VIEW
($\frac{3}{4}$" = 1'-0")

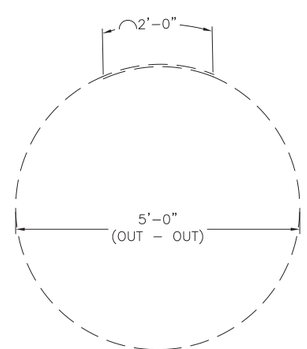

BEND DIAGRAM
24" LAP FOR #5 BAR
($\frac{3}{4}$" = 1'-0")

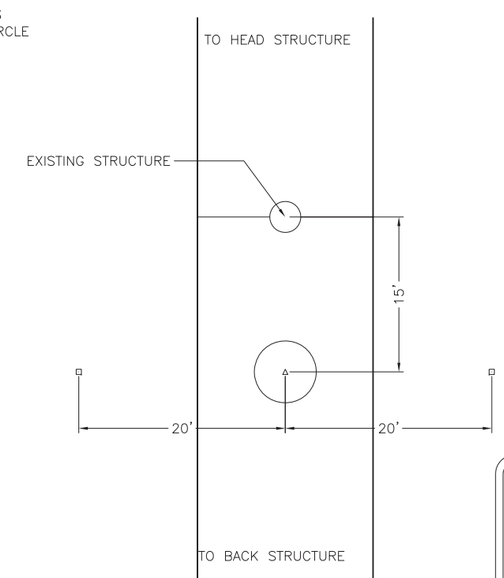

EXAMPLE STRUCTURE STAKING DIAGRAM
REFER TO 400298-C-K-XX FOR ADDITIONAL DETAILS

ISSUED FOR PERMITTING AS EXAMPLE
MAY 19, 2015

VER	DATE	VERSION DESCRIPTION	PREPARED/REVIEWED/APPROVED	VERSION
1				1
2				
3				
4				
5				
6				
7				

nationalgrid

PREPARED BY	JTF	05/19/15
REVIEWED BY		
APPROVED BY	JTF	05/19/15
SCALE	AS SHOWN	
SHEET	1 OF 1	
INDEX	400298	

EXAMPLE FOUNDATION DRAWING
MERRIMACK VALLEY RELIABILITY PROJECT
REINFORCED CONCRETE CAISSON FOUNDATION
EXAMPLE DRAWING - FULL DEPTH SOILS

CONFIDENTIALITY STATEMENT: THIS DOCUMENT CONTAINS CONFIDENTIAL AND PROPRIETARY INFORMATION OF NATIONAL GRID. IT IS TO BE USED BY AUTHORIZED CONTRACTORS FOR NATIONAL GRID SOLELY IN CONNECTION WITH THE SPECIFIC PROJECT FOR WHICH IT HAS BEEN TRANSMITTED. ANY OTHER USE, ITS TRANSMITTAL TO THIRD PARTIES, OR ITS REPRODUCTION WITHOUT PRIOR EXPRESS WRITTEN AUTHORIZATION OF NATIONAL GRID IS STRICTLY PROHIBITED.

PRINTED 5/20/2015 10:51 AM
PRINTED COPIES ARE NOT DOCUMENT CONTROLLED. FOR THE LATEST AUTHORIZED VERSION PLEASE REFER TO THE ENGINEERING DEPARTMENT DOCUMENTS CABINET IN DOCUMENTUM

INCHES ON ORIGINAL

400298-C-F-EX-02

CONFIDENTIALITY STATEMENT: THIS DOCUMENT CONTAINS CONFIDENTIAL AND PROPRIETARY INFORMATION OF NATIONAL GRID, IT IS TO BE USED BY AUTHORIZED CONTRACTORS FOR NATIONAL GRID SOLELY IN CONNECTION WITH THE SPECIFIC PROJECT FOR WHICH IT HAS BEEN TRANSMITTED. ANY OTHER USE, ITS TRANSMITTAL TO THIRD PARTIES, OR ITS REPRODUCTION WITHOUT PRIOR EXPRESS WRITTEN AUTHORIZATION OF NATIONAL GRID IS STRICTLY PROHIBITED.

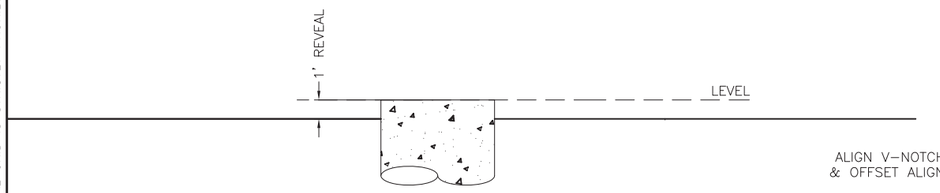

FOUNDATION REVEAL
LOOKING TOWARDS DRACUT JUNCTION
$\frac{1}{4}$" = 1'-0"

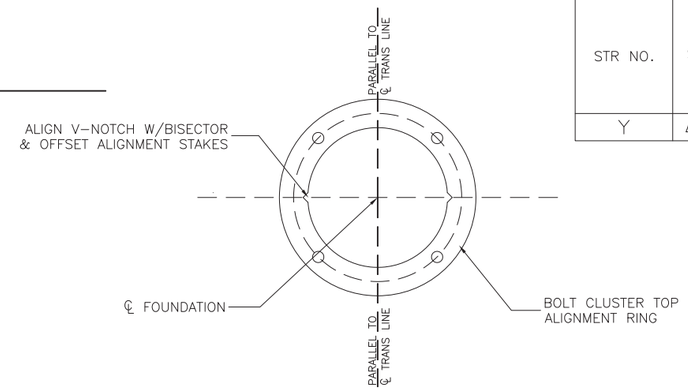

ANCHOR BOLT CLUSTER ORIENTATION
($\frac{3}{4}$" = 1'-0")

FOUNDATION DETAILS PER PIER

STR NO.	STR TYPE	LINE ANGLE Δ	PIER DIMENSIONS			ANCHOR BOLT CIRCLE DIA (IN)	NO. OF BOLTS	"NEAT-LINE" CONCRETE VOLUME (CU YD)	ANCHOR BOLT CLUSTER WEIGHT (LBS)
			LGTH (FT)	MIN EMBED (FT)	DIA (FT)				
Y	ΔDA SUSP	0.00	10'-0"	9'-0"	6'-0"	2'-11 1/2"	4	10.47	712.00

REINFORCING BAR SCHEDULE PER PIER

STR NO.	TYPE	QUANTITY	SIZE	SPACING	LAP LENGTH	DIA (FT)	LENGTH (FT)	WEIGHT (LBS)
Y	VERTICAL	14	#11	13.5"			21'-3"	1581
	HOOPS	11	#5		2'-0"	5'-0"	18'-3"	209

NOTES:
1. REINFORCING STEEL SHALL BE ASTM A615, GRADE 60.
2. COMPRESSIVE STRENGTH OF CONCRETE SHALL BE 4000 PSI (MINIMUM) AT 28 DAYS.
3. ALL WORK SHALL CONFORM TO ACI 318 AND 336 BUILDING CODE REQUIREMENTS FOR REINFORCED CONCRETE.
4. EXPOSED CONCRETE ABOVE GRADE SHALL BE FORMED FINISHED.
5. ANCHOR BOLT CLUSTERS SHALL BE BONDED TO REBAR CAGE PER DRAWING SP.06.01.301.101 SHEET 1.
6. ANCHOR BOLT CLUSTERS SHALL BE POSITIONED IN THE CULVERT OR FORM PRIOR TO PLACING CONCRETE ABOVE THE LEVEL OF THE LOWER ANCHOR ALIGNMENT RING.
7. ANCHOR BOLT CLUSTERS SHALL BE SET PLUMB.
8. ALL WORK SHALL CONFORM TO THE PROJECT CONSTRUCTION SPECIFICATION.
9. SEE DRAWING 400298-D-F-XX FOR ANCHOR BOLT CLUSTER DETAIL.
10. SEE DRAWING 400298-D-E-XX FOR SOIL BORING LOGS.
11. SEE DRAWING 400298-C-K-XX FOR STRUCTURE STAKING DIAGRAM.
12. SOIL OR ROCK CONDITIONS: WHERE SOIL DEPTHS, DEPTHS TO BEDROCK OR CONDITIONS OF THE SOIL OR BEDROCK DIFFER FROM THAT SHOWN ON THE BORING, THE ENGINEER SHALL BE CONTACTED.
13. PIER LENGTH IS ESTIMATED BASED ON DEPTH OF SOUND ROCK PER THE SOIL BORING. PIER TO BE KEYED INTO SOUND ROCK. ADJUST PIER LENGTH ACCORDINGLY. IN NO CASE SHALL THE PIER LENGTH BE LESS THAN REQUIRED TO SET THE ANCHOR BOLT CLUSTER TO THE SPECIFIED DEPTH.
14. ALL VERTICAL RE-BARS SHALL BE ANCHORED IN SOUND ROCK PER SECTION 17.5 OF THE CONSTRUCTION SPECIFICATION.
15. VERTICAL REINFORCING SHALL NOT BE LAP SPLICED. MECHANICAL SPLICING IS SUBJECT TO THE APPROVAL OF THE ENGINEER. WELDED SPLICES ARE NOT ALLOWED.
16. ALL #11 RE-BAR/ROCK ANCHORS SHALL BE PROOF LOAD TESTED PER SP.06.01.301.
17. COMMON OR SELECT BACKFILL (DEFINED PER THE CONSTRUCTION SPECIFICATION) SHALL BE PLACED AROUND THE OUTSIDE OF THE CULVERT. BACKFILL SHALL BE THOROUGHLY TAMPED USING MECHANICAL TAMPERS IN LAYERS NOT EXCEEDING 12 INCHES IN DEPTH.
18. DISCARD ANCHOR BOLT ALIGNMENT RING AFTER CONCRETE SETS.

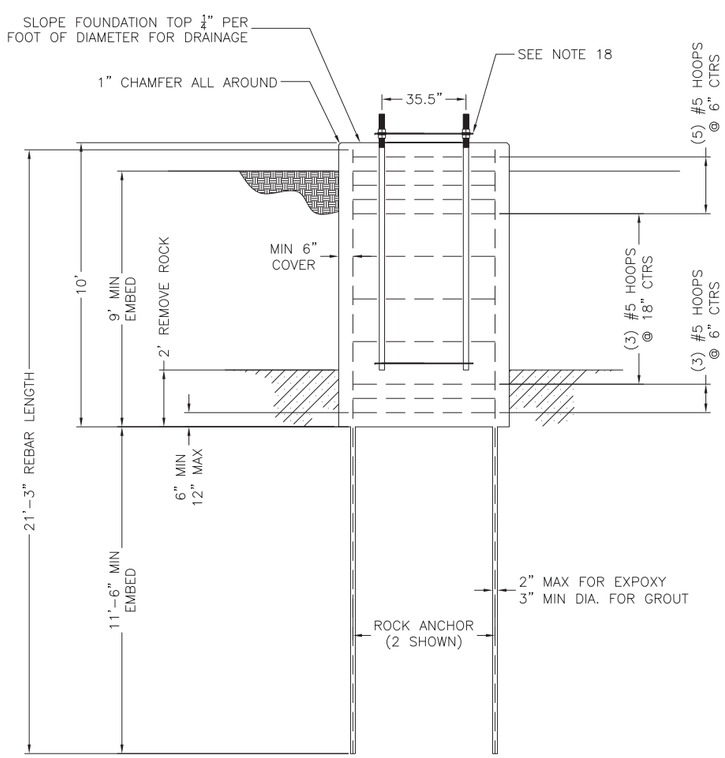

DRILLED PIER FOUNDATION
ELEVATION VIEW
$\frac{3}{8}$" = 1'-0"

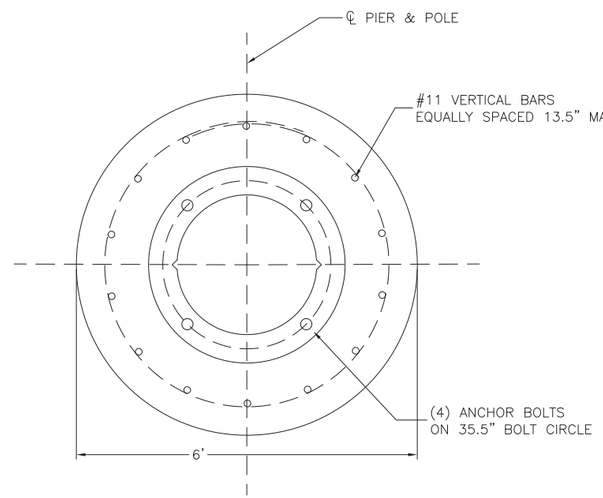

FOUNDATION PLAN VIEW
($\frac{3}{4}$" = 1'-0")

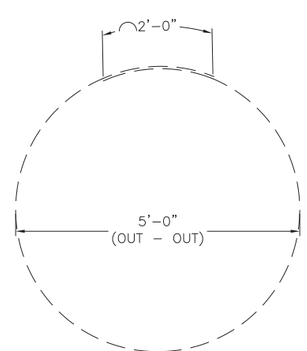

BEND DIAGRAM
24" LAP FOR #5 BAR
($\frac{3}{4}$" = 1'-0")

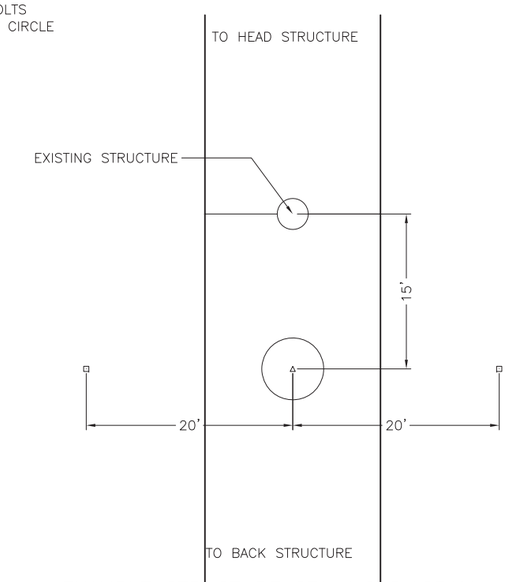

EXAMPLE STRUCTURE STAKING DIAGRAM
REFER TO 400298-C-K-XX FOR ADDITIONAL DETAILS

ISSUED FOR PERMITTING AS EXAMPLE
MAY 19, 2015

VER	DATE	VERSION DESCRIPTION	PREPARED/REVIEWED/APPROVED	VERSION
1				1
2				
3				
4				
5				
6				
7				

nationalgrid

PREPARED BY	JTF	05/19/15
REVIEWED BY		
APPROVED BY	JTF	05/19/15
SCALE	AS SHOWN	
SHEET	1 OF 1	
INDEX	400298	

EXAMPLE FOUNDATION DRAWING
MERRIMACK VALLEY RELIABILITY PROJECT
REINFORCED CONCRETE CAISSON FOUNDATION
EXAMPLE DRAWING - CAISSON WITH GROUTED REBAR

PRINTED 5/20/2015 9:43 AM
PRINTED COPIES ARE NOT DOCUMENT CONTROLLED. FOR THE LATEST AUTHORIZED VERSION PLEASE REFER TO THE ENGINEERING DEPARTMENT DOCUMENTS CABINET IN DOCUMENTUM

INCHES ON ORIGINAL

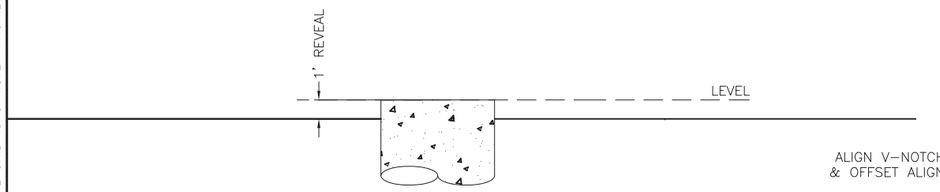

FOUNDATION REVEAL
LOOKING TOWARDS DRACUT JUNCTION
$\frac{1}{4}$" = 1'-0"

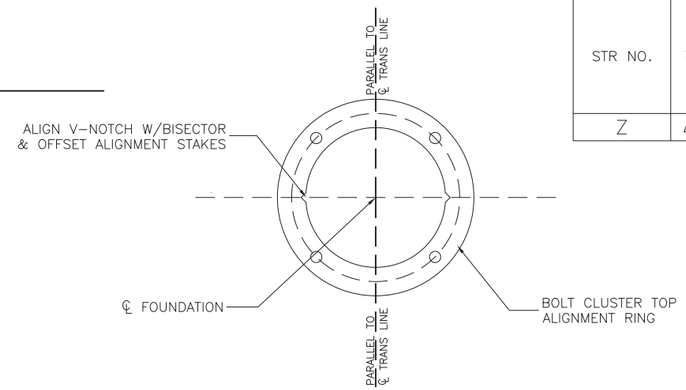

ANCHOR BOLT CLUSTER ORIENTATION
($\frac{3}{4}$" = 1'-0")

FOUNDATION DETAILS PER PIER

STR NO.	STR TYPE	LINE ANGLE Δ	PIER DIMENSIONS			ANCHOR BOLT CIRCLE DIA (IN)	NO. OF BOLTS	"NEAT-LINE" CONCRETE VOLUME (CU YD)	ANCHOR BOLT CLUSTER WEIGHT (LBS)
			LGTH (FT)	MIN EMBED (FT)	DIA (FT)				
Z	ΔDA SUSP	0.00	14'-6"	13'-6"	6'-0"	2'-11 1/2"	4	15.18	712.00

REINFORCING BAR SCHEDULE PER PIER

STR NO.	TYPE	QUANTITY	SIZE	SPACING	LAP LENGTH	DIA (FT)	LENGTH (FT)	WEIGHT (LBS)
Z	VERTICAL	14	#11	13.5"			14'-0"	1041
	HOOPS	14	#5		2'-0"	5'-0"	18'-3"	266

NOTES:
1. REINFORCING STEEL SHALL BE ASTM A615, GRADE 60.
2. COMPRESSIVE STRENGTH OF CONCRETE SHALL BE 4000 PSI (MINIMUM) AT 28 DAYS.
3. ALL WORK SHALL CONFORM TO ACI 318 AND 336 BUILDING CODE REQUIREMENTS FOR REINFORCED CONCRETE.
4. EXPOSED CONCRETE ABOVE GRADE SHALL BE FORMED FINISHED.
5. ANCHOR BOLT CLUSTERS SHALL BE BONDED TO REBAR CAGE PER DRAWING SP.06.01.301.101 SHEET 1.
6. ANCHOR BOLT CLUSTERS SHALL BE POSITIONED IN THE CULVERT OR FORM PRIOR TO PLACING CONCRETE ABOVE THE LEVEL OF THE LOWER ANCHOR ALIGNMENT RING.
7. ANCHOR BOLT CLUSTERS SHALL BE SET PLUMB.
8. ALL WORK SHALL CONFORM TO THE PROJECT CONSTRUCTION SPECIFICATION.
9. SEE DRAWING 400298-D-F-XX FOR ANCHOR BOLT CLUSTER DETAIL.
10. SEE DRAWING 400298-D-E-XX FOR SOIL BORING LOGS.
11. SEE DRAWING 400298-C-K-XX FOR STRUCTURE STAKING DIAGRAM.
12. SOIL OR ROCK CONDITIONS: WHERE SOIL DEPTHS, DEPTHS TO BEDROCK OR CONDITIONS OF THE SOIL OR BEDROCK DIFFER FROM THAT SHOWN ON THE BORING, THE ENGINEER SHALL BE CONTACTED.
13. PIER LENGTH IS ESTIMATED BASED ON DEPTH OF SOUND ROCK PER THE SOIL BORING. PIER TO BE KEYED INTO SOUND ROCK. ADJUST PIER LENGTH ACCORDINGLY. IN NO CASE SHALL THE PIER LENGTH BE LESS THAN REQUIRED TO SET THE ANCHOR BOLT CLUSTER TO THE SPECIFIED DEPTH.
14. ALL VERTICAL RE-BARS SHALL BE ANCHORED IN SOUND ROCK PER SECTION 17.5 OF THE CONSTRUCTION SPECIFICATION.
15. VERTICAL REINFORCING SHALL NOT BE LAP SPLICED. MECHANICAL SPLICING IS SUBJECT TO THE APPROVAL OF THE ENGINEER. WELDED SPLICES ARE NOT ALLOWED.
16. ALL #11 RE-BAR/ROCK ANCHORS SHALL BE PROOF LOAD TESTED PER SP.06.01.301.
17. COMMON OR SELECT BACKFILL (DEFINED PER THE CONSTRUCTION SPECIFICATION) SHALL BE PLACED AROUND THE OUTSIDE OF THE CULVERT. BACKFILL SHALL BE THOROUGHLY TAMPED USING MECHANICAL TAMPERS IN LAYERS NOT EXCEEDING 12 INCHES IN DEPTH.
18. DISCARD ANCHOR BOLT ALIGNMENT RING AFTER CONCRETE SETS.

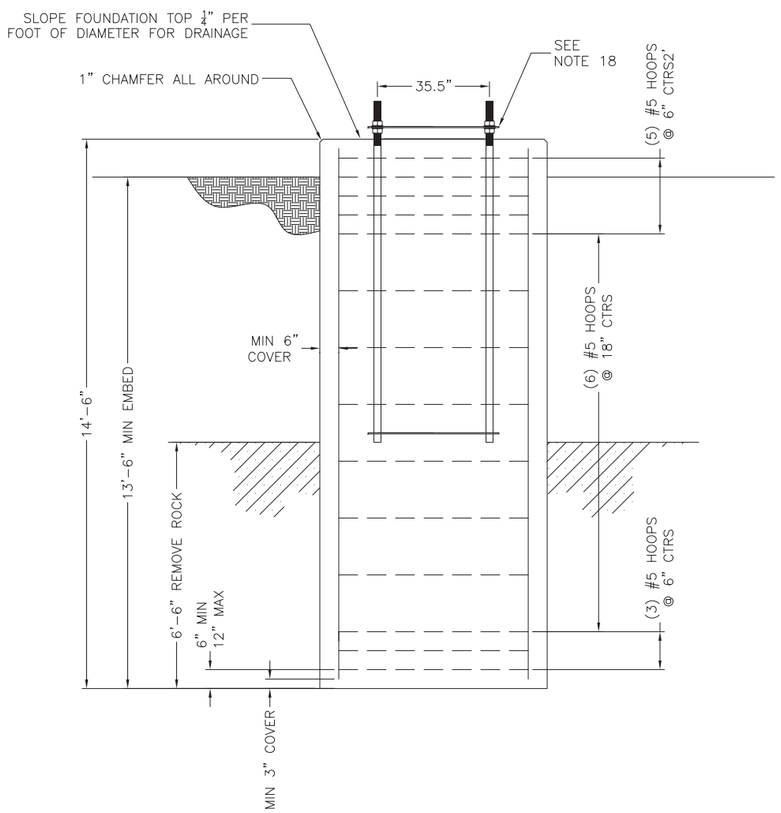

DRILLED PIER FOUNDATION
ELEVATION VIEW
$\frac{1}{2}$" = 1'-0"

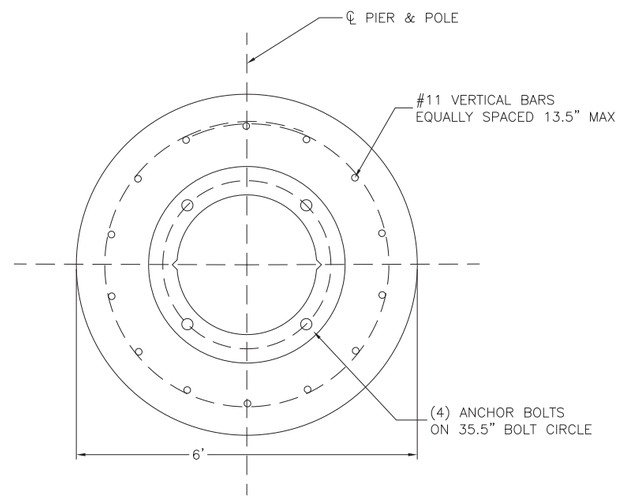

FOUNDATION PLAN VIEW
($\frac{3}{4}$" = 1'-0")

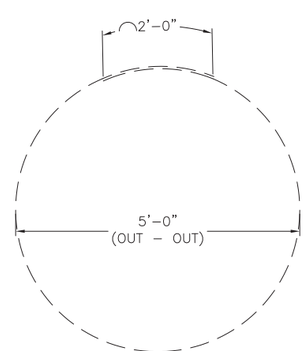

BEND DIAGRAM
24" LAP FOR #5 BAR
($\frac{3}{4}$" = 1'-0")

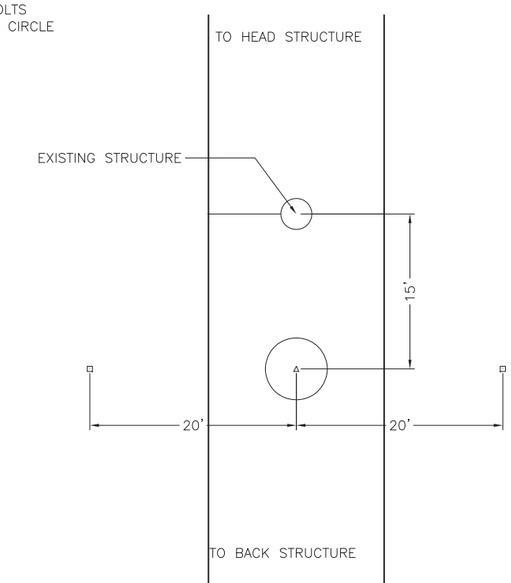

EXAMPLE STRUCTURE STAKING DIAGRAM
REFER TO 400298-C-K-XX FOR ADDITIONAL DETAILS

ISSUED FOR PERMITTING AS EXAMPLE
MAY 19, 2015

VER	DATE	ISSUED FOR CONSTRUCTION	VERSION DESCRIPTION	PREPARED/REVIEWED/APPROVED	VERSION
1	03/13				1
2					
3					
4					
5					
6					
7					

nationalgrid

PREPARED BY	JTF	05/19/15
REVIEWED BY		
APPROVED BY	JTF	05/19/15
SCALE	AS SHOWN	
SHEET	1 OF 1	
INDEX	400298	

EXAMPLE FOUNDATION DRAWING
MERRIMACK VALLEY RELIABILITY PROJECT
REINFORCED CONCRETE CAISSON FOUNDATION
EXAMPLE DRAWING - CAISSON WITH ROCK SOCKET

CONFIDENTIALITY STATEMENT: THIS DOCUMENT CONTAINS CONFIDENTIAL AND PROPRIETARY INFORMATION OF NATIONAL GRID. IT IS TO BE USED BY AUTHORIZED CONTRACTORS FOR NATIONAL GRID SOLELY IN CONNECTION WITH THE SPECIFIC PROJECT FOR WHICH IT HAS BEEN TRANSMITTED. ANY OTHER USE, ITS TRANSMITTAL TO THIRD PARTIES, OR ITS REPRODUCTION WITHOUT PRIOR EXPRESS WRITTEN AUTHORIZATION OF NATIONAL GRID IS STRICTLY PROHIBITED.

PRINTED 5/19/2015 11:44 AM
PRINTED COPIES ARE NOT DOCUMENT CONTROLLED. FOR THE LATEST AUTHORIZED VERSION PLEASE REFER TO THE ENGINEERING DEPARTMENT DOCUMENTS CABINET IN DOCUMENTUM

INCHES ON ORIGINAL

CONFIDENTIALITY STATEMENT: THIS DOCUMENT CONTAINS CONFIDENTIAL AND PROPRIETARY INFORMATION OF NATIONAL GRID. IT IS TO BE USED BY AUTHORIZED CONTRACTORS FOR NATIONAL GRID SOLELY IN CONNECTION WITH THE SPECIFIC PROJECT FOR WHICH IT HAS BEEN TRANSMITTED. ANY OTHER USE, ITS TRANSMITTAL TO THIRD PARTIES, OR ITS REPRODUCTION WITHOUT PRIOR EXPRESS WRITTEN AUTHORIZATION OF NATIONAL GRID IS STRICTLY PROHIBITED.

MATERIAL LIST					
	QUANTITY		DESCRIPTION	PS ITEM ID	SAP ITEM ID
ITEM	OPT 1	OPT 2			
1	1	1	12 GA. CORRUGATED STEEL PIPE	PO	PO
2	1	–	HDPE PIPE, 42" DIAMETER	PO	PO

NOTES:
1. SEE DRAWING SP.06.01.301.101 FOR GROUNDING DETAILS.
2. MAINTAIN 3" TO 8" SPACING BETWEEN POLE AND CORRUGATED STEEL PILE. CORRUGATED STEEL PIPE LENGTHS "L" ARE TO BE USED SUCH THAT THEY ARE BURIED AT LEAST AS DEEP AS POLES. BACKFILL INSIDE CORRUGATED STEEL PIPE AS NECESSARY TO ACHIEVE PROPER POLE EMBEDMENT DEPTH. FOR STEEL POLES, "L" AND "D" ARE SPECIFIED BY THE DESIGNER
3. TOP EDGE OF CORRUGATED STEEL PIPE SHALL BE BURIED A MINIMUM OF 18 INCHES BELOW GRADE FOR WOOD POLES. BACKFILL STONE SHALL BE MOUNDED ABOVE GROUNDLINE
4. WHERE CORRUGATED STEEL PIPES ARE INSTALLED IN ADVANCE OF POLE INSTALLATION, HOLE IS TO BE COVERED AND SECURED IN A METHOD ACCEPTABLE TO NATIONAL GRID
5. HDPE PIPE IS ORDERED IN 20' LENGTHS. PIPE SHALL BE FIELD CUT TO 2' INCREMENTS.

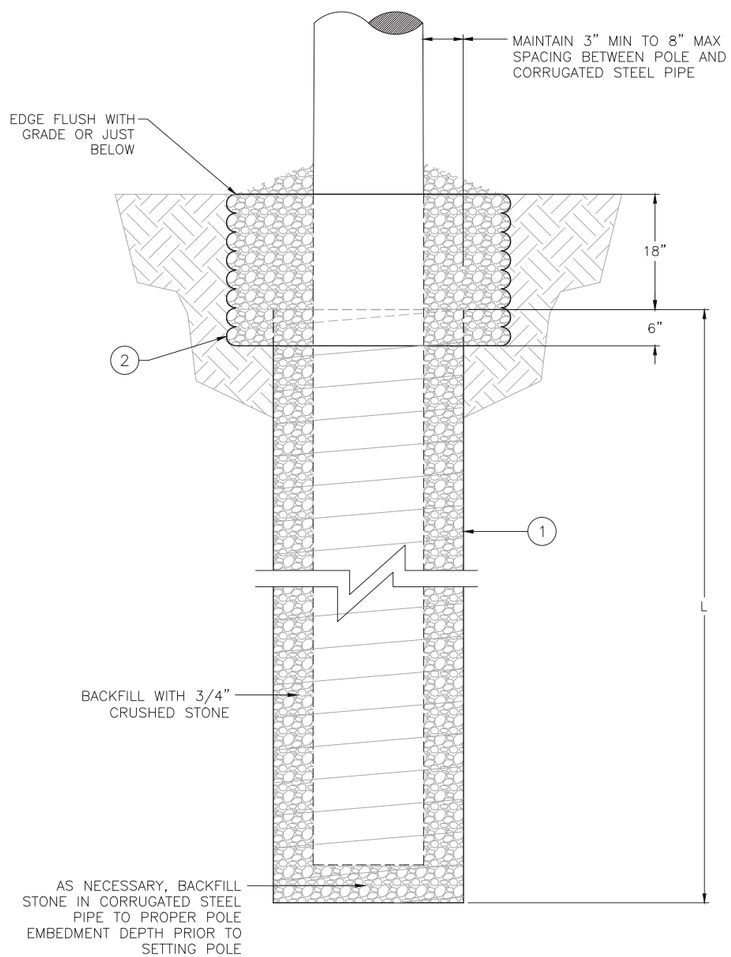

OPTION 1
SCALE: 1" = 1'-0"

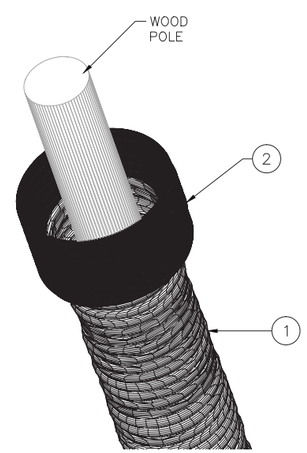

ISOMETRIC VIEW
SHOWING ORIENTATION OF WOOD POLE, CURROGATED STEEL PIPE AND HDPE PIPE

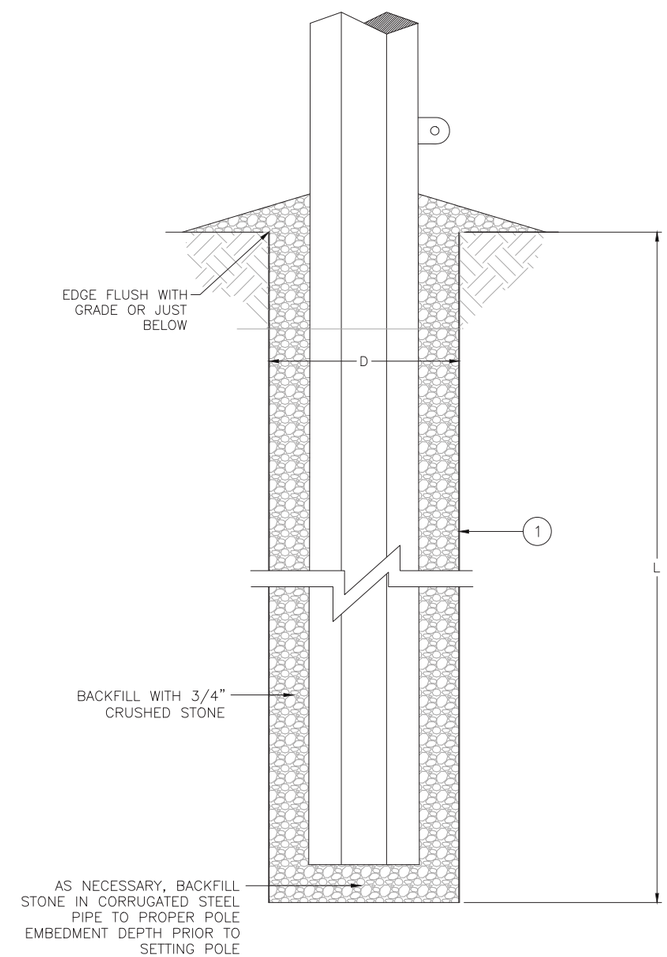

OPTION 2
SCALE: 1" = 1'-0"
STEEL POLE

VER	DATE	VERSION DESCRIPTION	PREPARED	REVIEWED	APPROVED
1	02/02/10	02/09/95 REISSUED AS SP.06.01.301.401; 02/09/95 SUPERSEDED	JLC		
2	03/31/11	REQUIRE EDGE OF CULVERT 18" BELOW GRADE FOR WOOD; D-11679 SUPERSEDED BY SP.06.01.301.101	JLC		
3	07/09/12	ADD SAP ITEM ID NUMBERS	SLB		MSB
4	02/07/13	VARIOUS MINOR CORRECTIONS	KAD	SAM	MSB
5	03/24/14	REMOVE GROUNDING DETAILS FROM WOOD POLE DETAILS, ADD USE HDPE PIPE	TEC	KAD	
6	01/13/15	REMOVED UNNEEDED DIMENSION FOR OPTION 2 DETAIL	TEC	KAD	

VERSION

nationalgrid

PREPARED BY	JLC	2/4/10
REVIEWED BY		
APPROVED BY		
SCALE	NTS	
SHEET	1 OF 1	
INDEX		

TRANSMISSION STANDARD

DETAILS FOR INSTALLATION OF WOOD AND STEEL POLES IN CORRUGATED PIPES

PRINTED COPIES ARE NOT DOCUMENT CONTROLLED. FOR THE LATEST AUTHORIZED VERSION PLEASE REFER TO THE ENGINEERING DEPARTMENT DOCUMENTS CABINET IN DOCUMENTUM

PRINTED 1/13/2015 8:36 AM

INCHES ON ORIGINAL

CONFIDENTIALITY STATEMENT: THIS DOCUMENT CONTAINS CONFIDENTIAL AND PROPRIETARY INFORMATION OF NATIONAL GRID. IT IS TO BE USED BY AUTHORIZED CONTRACTORS FOR NATIONAL GRID SOLELY IN CONNECTION WITH THE SPECIFIC PROJECT FOR WHICH IT HAS BEEN TRANSMITTED. ANY OTHER USE, ITS TRANSMITTAL TO THIRD PARTIES, OR ITS REPRODUCTION WITHOUT PRIOR EXPRESS WRITTEN AUTHORIZATION OF NATIONAL GRID IS STRICTLY PROHIBITED.

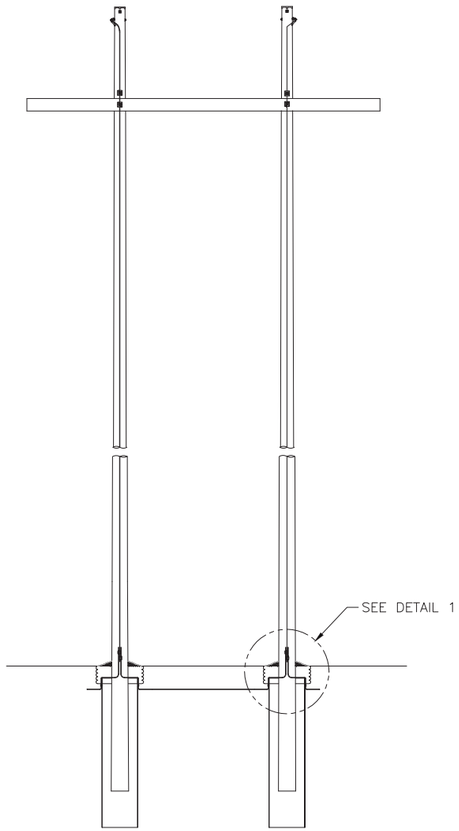

H–FRAME STRUCTURE

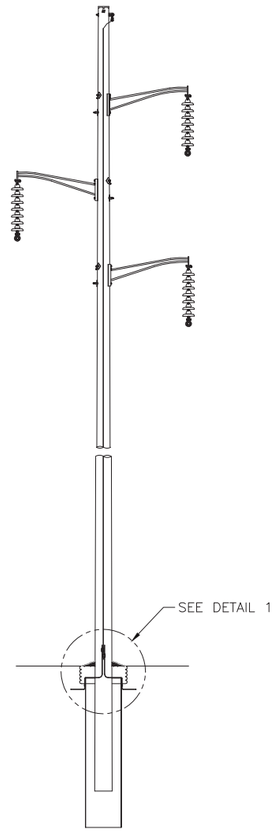

SINGLE POLE STRUCTURE

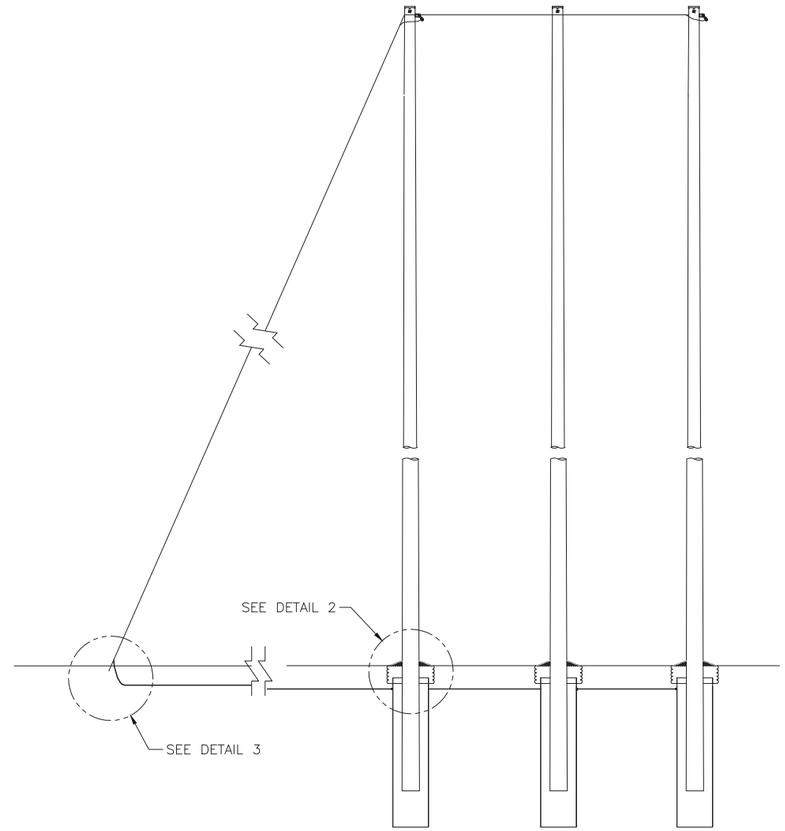

THREE POLE STRUCTURE

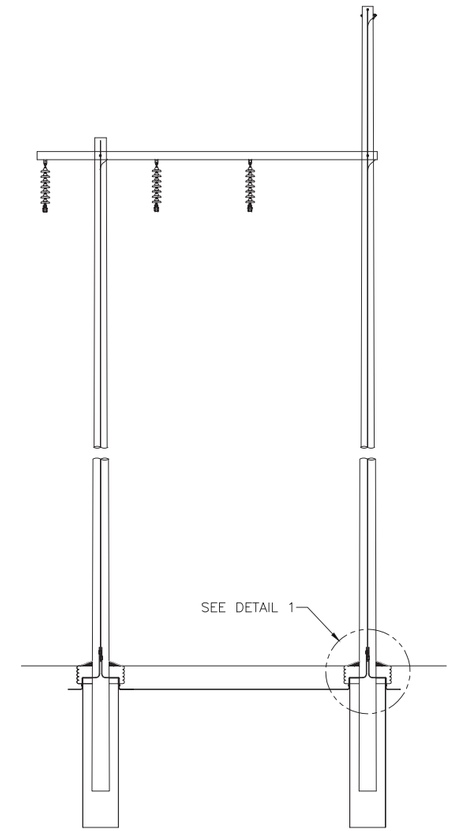

POLARM STRUCTURE

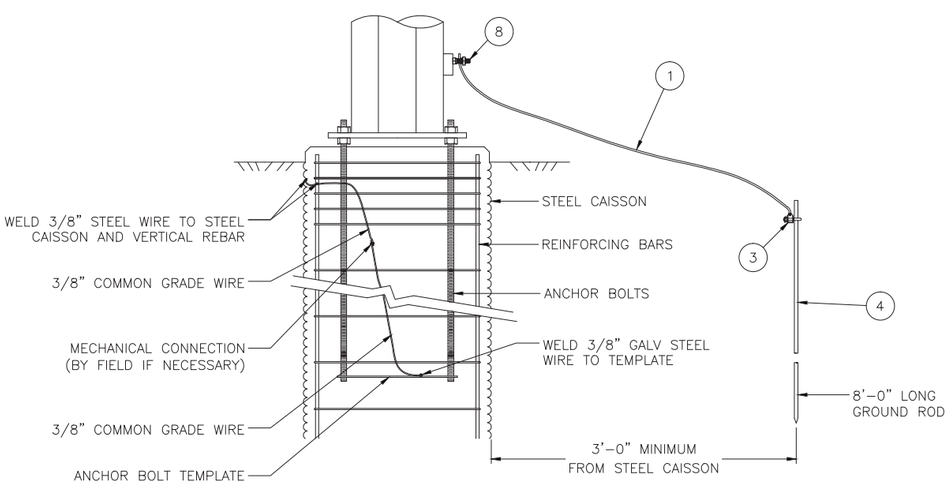

CAISSON

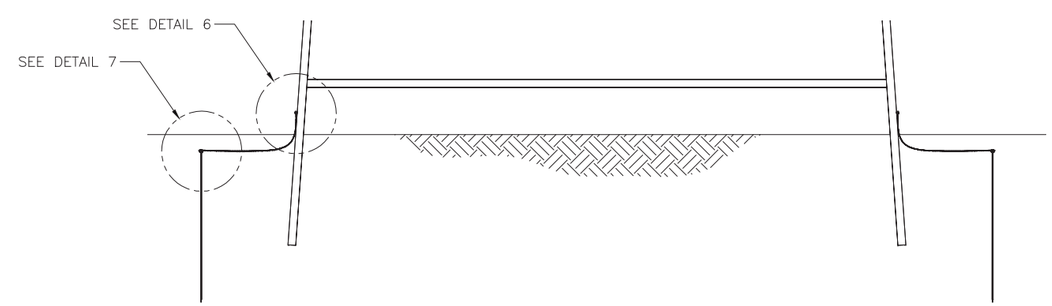

STEEL TOWER

VER	DATE	VERSION DESCRIPTION	PREPARED	REVIEWED	APPROVED
8	07/05/12	ADD SAP ITEM ID NUMBERS	SLB		MSB
9	09/10/13	ADDED GROUNDING LUG, CORRECTED VIEW AND SECTION REFERENCES	TEC	KAD	LGS
10	11/25/13	SHEETS 2 & 5, CORRECT MATERIAL ITEM ID FOR GROUNDING LUG	TEC		
11	04/25/14	ADD DETAIL DESCRIPTIONS, ADD HDPE PIPE	TEC	KAD	
12	09/19/14	CLARIFY DETAIL 4 AND CORRECT GROUND ROD CLAMP ITEM ID ON PAGE 2	TEC	BMR	KAD
13	10/07/14	CHANGE WIRE USED FROM #1 TO #2 AS PER OF ATMAS SHEETS 4 & 5	TEC	BMR	KAD
14	11/30/15	ADD ANN POLARM GROUNDING P.1, ADD NOTE 2 P.6, REMOVE STANDOFF BRACKETS DETAILS P.6	TEC	BMR	KAD

VERSION 14

nationalgrid

PREPARED BY	JLC	02/02/10
REVIEWED BY	JME	02/02/10
APPROVED BY	MSB	02/02/10
SCALE	NONE	
SHEET	1 OF 6	
INDEX	SP.06.01.301	

TRANSMISSION LINE STANDARD

GROUNDING DETAILS FOR TRANSMISSION LINE STRUCTURES

PRINTED COPIES ARE NOT DOCUMENT CONTROLLED. FOR THE LATEST AUTHORIZED VERSION PLEASE REFER TO THE ENGINEERING DEPARTMENT DOCUMENTS CABINET IN DOCUMENTUM

PRINTED 11/30/2015 10:29 AM

INCHES ON ORIGINAL

CONFIDENTIALITY STATEMENT: THIS DOCUMENT CONTAINS CONFIDENTIAL AND PROPRIETARY INFORMATION OF NATIONAL GRID. IT IS TO BE USED BY AUTHORIZED CONTRACTORS FOR NATIONAL GRID SOLELY IN CONNECTION WITH THE SPECIFIC PROJECT FOR WHICH IT HAS BEEN TRANSMITTED. ANY OTHER USE, ITS TRANSMITTAL TO THIRD PARTIES, OR ITS REPRODUCTION WITHOUT PRIOR EXPRESS WRITTEN AUTHORIZATION OF NATIONAL GRID IS STRICTLY PROHIBITED.

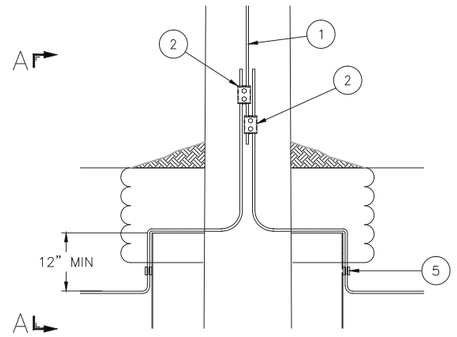

DETAIL 1
SCALE: 1"=1'-0"
POLE W/DOWNLEAD

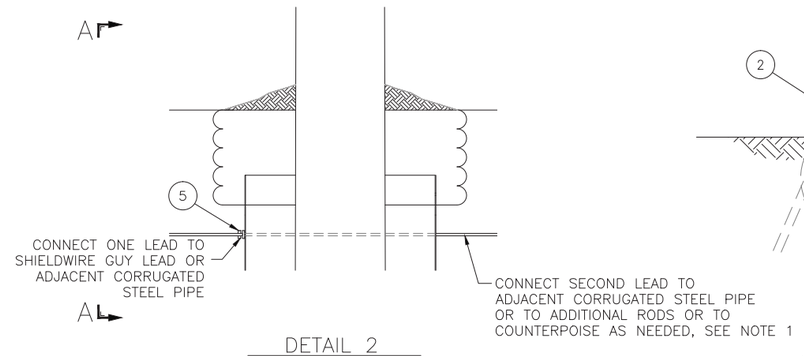

DETAIL 2
SCALE: 1"=1'-0"
POLE W/O DOWNLEAD

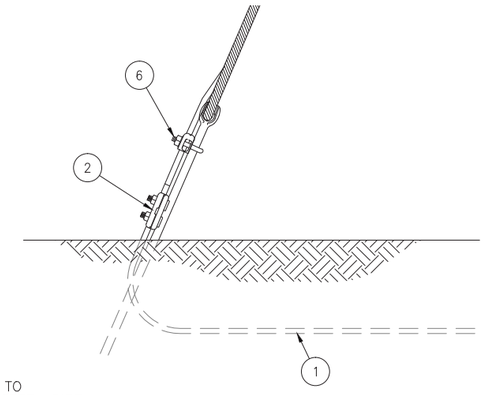

DETAIL 3
SCALE: 1/4"=1'-0"
BONDED SW GUY

MATERIAL LIST			
ITEM	DESCRIPTION	PS ITEM ID	SAP ITEM ID
1	⅜" Common Grade Steel Wire	5998530	9306353
2	Clamp, Parallel Groove, Bronze	5962562	9320554
3	Clamp, Ground Rod, ⅝"	3503390	9313417
4	Rod, Copperweld, Ground, ⅝" x 8'-0"	3503013	9313616
5	Clamp, Bronze	5105146	9309820
6	Ground Clamp for Anchor Rod	5986688	9320250
7	Nut, Hex ½" SS	7001719	9319754
8	Lug, grounding, ½"	5961547	9313780

NOTES:
1. TESTING OF GROUND IMPEDANCE FOR WOOD POLES SHALL BE PERFORMED ON EACH POLE AS SP.06.01.301, AND THE APPROPRIATE SUPPLEMENTARY GROUND GRIDS INSTALLED BASED ON THIS DRAWING AND AS SPECIFIED IN SP.06.01.301
2. TESTING OF GROUND IMPEDANCE FOR STEEL POLES OR LATTICE TOWERS IS NOT REQUIRED PER SP.06.01.301.
3. ARRANGEMENT OF GROUND RODS AND COUNTERPOISE SHOWN IN FIGURES; CONNECTIONS SHOWN IN REFERENCED DETAIL DRAWINGS
4. STRUCTURES WHICH DO NOT REQUIRE ADDITIONAL GROUND GRID INSTALLATION SHALL HAVE EXCESS GROUNDWIRE CUT OFF 12" BELOW GROUNDLINE OR BURIED AT LEAST 12" BELOW GROUNDLINE

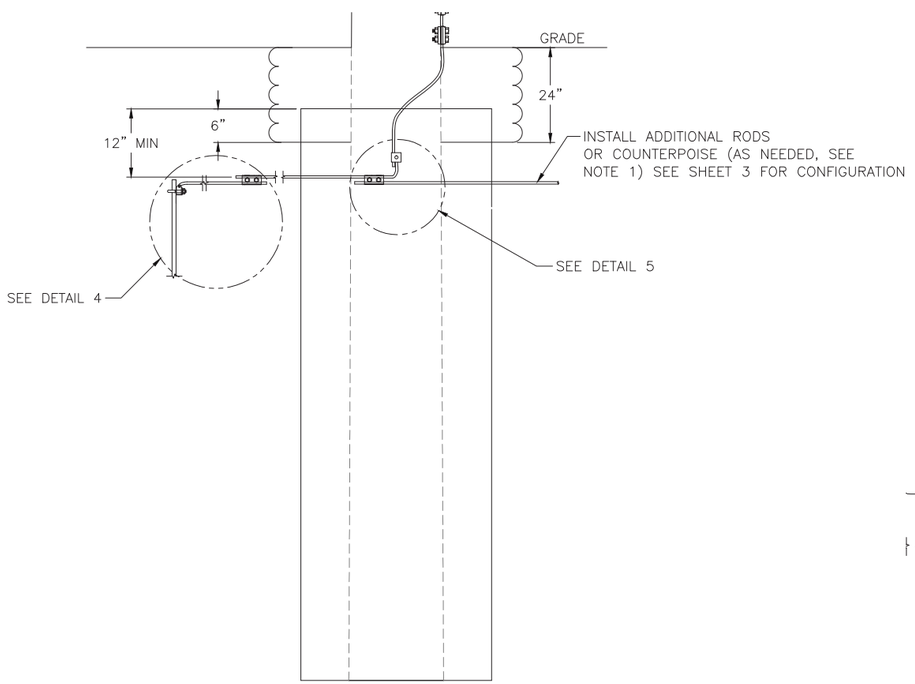

SECTION A–A
SCALE: 1" = 1'-0"
CORRUGATED STEEL PIPE GROUNDING ATTACHMENT

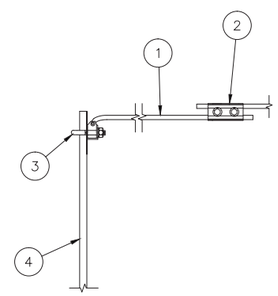

DETAIL 4
SCALE: 3" = 1'-0"
POLE GROUND ROD ATTACHMENT DETAIL (AS NEEDED) SEE NOTE 1

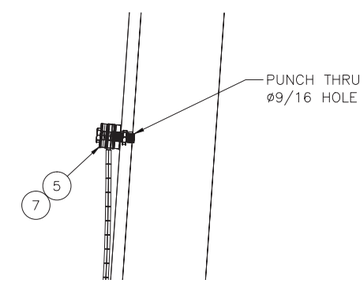

DETAIL 6
SCALE: 3" = 1'-0"
TOWER GROUNDING DETAIL

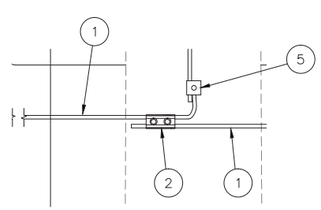

DETAIL 5
SCALE: 3" = 1'-0"
COUNTERPOISE ATTACHMENT DETAIL

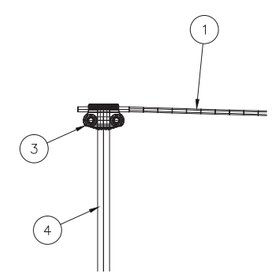

DETAIL 7
SCALE: 3" = 1'-0"
TOWER GROUND ROD ATTACHMENT DETAIL

VER	DATE	VERSION DESCRIPTION	PREPARED BY	REVIEWED BY	APPROVED BY
8	07/05/12	ADD SAP ITEM ID NUMBERS	SLB	MSB	
9	09/10/13	ADDED GROUNDING LUG, CORRECTED VIEW AND SECTION REFERENCES	TEC	KAD	LGS
10	11/25/13	SHEETS 2 & 5, CORRECT MATERIAL ITEM ID FOR GROUNDING LUG	TEC		
11	04/25/14	ADD DETAIL DESCRIPTIONS, ADD HDPE PIPE	TEC	KAD	
12	09/19/14	CLARIFY DETAIL 4 AND CORRECT GROUND ROD CLAMP ITEM ID ON PAGE 2	TEC	BMR	KAD
13	06/07/15	CHANGE WIRE TO FLAT, ADD NOTES 3 & 4, ADD SHEETS 4 & 5	TEC	BMR	KAD
14	11/30/15	ADD ø16 POLARM GROUNDING, ADD NOTE 2, ADD DETAILS 6 & 7, REMOVE STANDOFF BRACKETS	TEC	BMR	KAD

VERSION 14

PRINTED 11/30/2015 10:29 AM

nationalgrid

PREPARED BY	JLC	02/02/10
REVIEWED BY	JME	02/02/10
APPROVED BY	MSB	02/02/10
SCALE	NONE	
SHEET	2 OF 6	
INDEX	SP.06.01.301	

TRANSMISSION LINE STANDARD

GROUNDING DETAILS FOR TRANSMISSION LINE STRUCTURES

PRINTED COPIES ARE NOT DOCUMENT CONTROLLED. FOR THE LATEST AUTHORIZED VERSION PLEASE REFER TO THE ENGINEERING DEPARTMENT DOCUMENTS CABINET IN DOCUMENTUM

INCHES ON ORIGINAL

CONFIDENTIALITY STATEMENT: THIS DOCUMENT CONTAINS CONFIDENTIAL AND PROPRIETARY INFORMATION OF NATIONAL GRID SOLELY IN CONNECTION WITH THE SPECIFIC PROJECT FOR WHICH IT HAS BEEN TRANSMITTED. ANY OTHER USE, ITS TRANSMITTAL TO THIRD PARTIES, OR ITS REPRODUCTION WITHOUT PRIOR EXPRESS WRITTEN AUTHORIZATION OF NATIONAL GRID IS STRICTLY PROHIBITED.

TRANSMISSION STRUCTURE GROUND GRID CONFIGURATION PLAN VIEWS

SINGLE POLE STRUCTURE

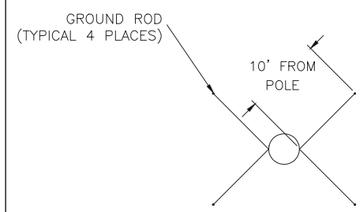

INSTALL 4 GROUND RODS

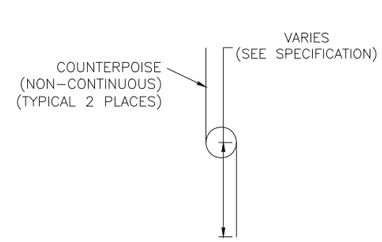

INSTALL 2 STRIPS COUNTERPOISE

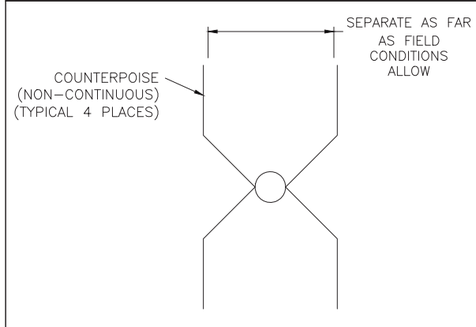

INSTALL 4 STRIPS COUNTERPOISE

TWO POLE STRUCTURE

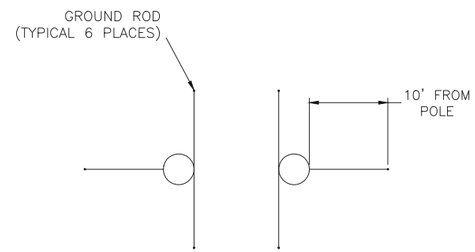

INSTALL 6 GROUND RODS

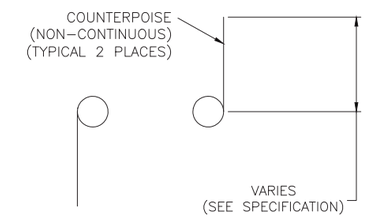

INSTALL 2 STRIPS COUNTERPOISE

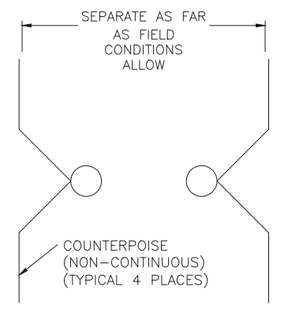

INSTALL 4 STRIPS COUNTERPOISE

THREE POLE STRUCTURE

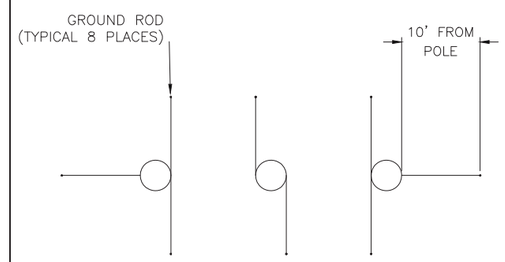

INSTALL 8 GROUND RODS

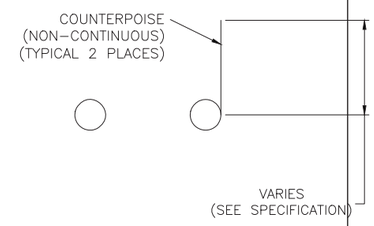

INSTALL 2 STRIPS COUNTERPOISE

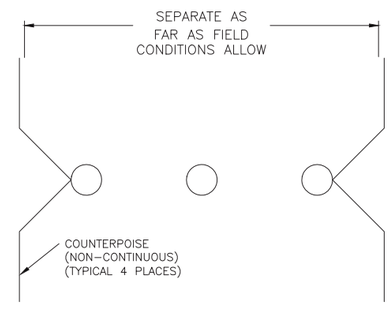

INSTALL 4 STRIPS COUNTERPOISE

VER	DATE	VERSION DESCRIPTION	REVIEW	REVIEW	APPROVE
8	07/05/12	ADD SAP ITEM ID NUMBERS	SLB		MSB
9	09/10/13	ADDED GROUNDING LUG, CORRECTED VIEW AND SECTION REFERENCES	TEC	KAD	LGS
10	11/25/13	SHEETS 2 & 5, CORRECT MATERIAL ITEM ID FOR GROUNDING LUG	TEC		
11	04/25/14	ADD DETAIL DESCRIPTIONS, ADD HDPE PIPE	TEC	KAD	
12	09/19/14	CLARIFY DETAIL 4 AND CORRECT GROUND ROD CLAMP ITEM ID ON PAGE 2	TEC	BMR	KAD
13	06/02/15	CHANGE WIRE LENGTH FOR ALL DETAILS ON PAGE 2, ADD NOTE 2 ON ALL SHEETS 4 & 5	TEC	BMR	KAD
14	11/30/15	ADD 2nd POLARM GROUNDING P.1, ADD NOTE 2 P.6, REMOVE STANDOFF BRACKET DETAILS P.6	TEC	BMR	KAD

VERSION 14

nationalgrid

PREPARED BY	JLC	02/02/10
REVIEWED BY	JME	02/02/10
APPROVED BY	MSB	02/02/10
SCALE	NONE	
SHEET	3 OF 6	
INDEX	SP.06.01.301	

TRANSMISSION LINE STANDARD

GROUNDING DETAILS FOR TRANSMISSION LINE STRUCTURES

PRINTED COPIES ARE NOT DOCUMENT CONTROLLED. FOR THE LATEST AUTHORIZED VERSION PLEASE REFER TO THE ENGINEERING DEPARTMENT DOCUMENTS CABINET IN DOCUMENTUM

PRINTED 11/30/2015 10:30 AM

INCHES ON ORIGINAL

CONFIDENTIALITY STATEMENT: THIS DOCUMENT CONTAINS CONFIDENTIAL AND PROPRIETARY INFORMATION OF NATIONAL GRID SOLELY IN CONNECTION WITH THE SPECIFIC PROJECT FOR WHICH IT HAS BEEN TRANSMITTED. ANY OTHER USE, ITS TRANSMITTAL TO THIRD PARTIES, OR ITS REPRODUCTION WITHOUT PRIOR EXPRESS WRITTEN AUTHORIZATION OF NATIONAL GRID IS STRICTLY PROHIBITED.

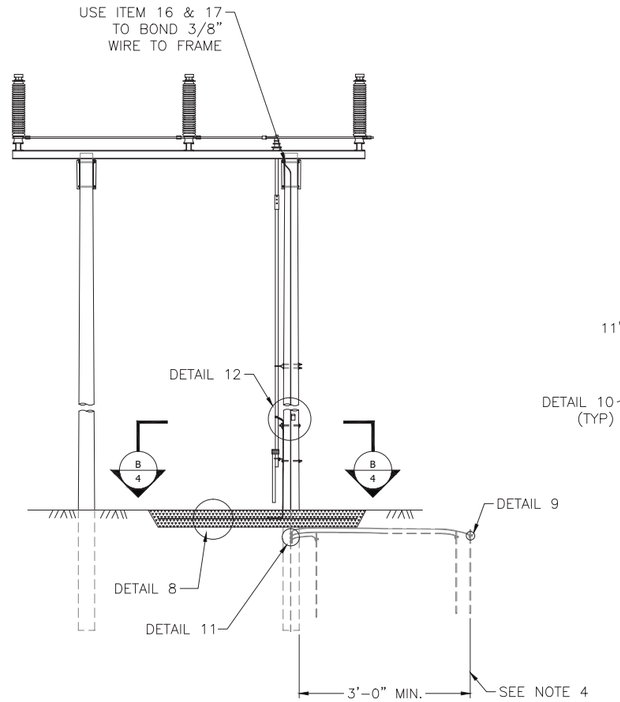

FRONT ELEVATION

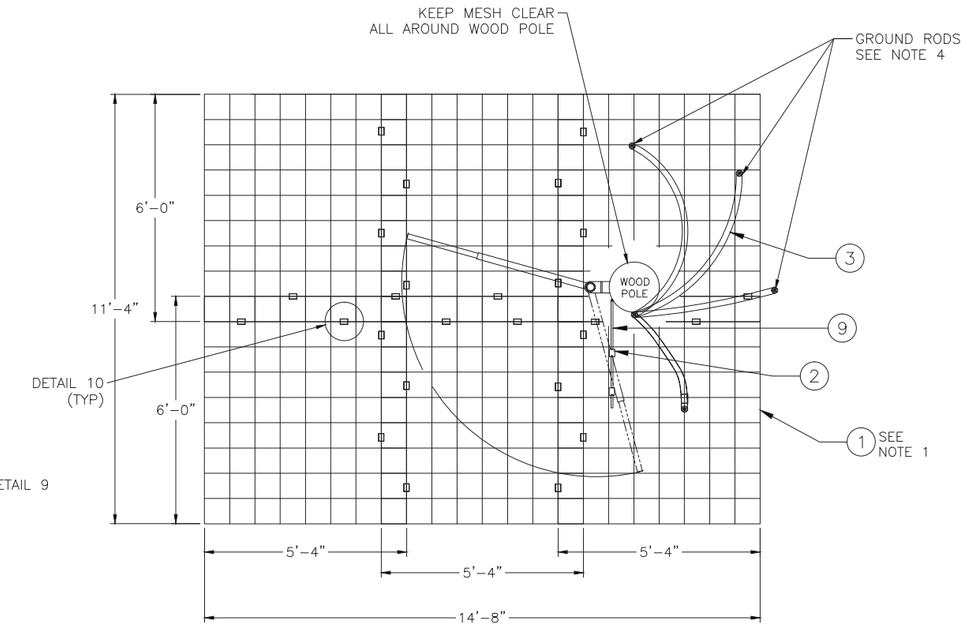

SECTION B–B

MATERIAL LIST				
ITEM	QUAN	DESCRIPTION	PS ITEM ID	SAP ITEM ID
1	6	#6 WIRE MESH, 8" SQUARES, 40% Cu CLAD 5'–4"x6'–0" FLAT MAT	9202952	9307626
2	29	COPPER CRIMPIT ("C" TYPE)	5105243	9309996
3	40	3/8" COMMON GRADE STEEL WIRE (FEET)	5998530	9306353
4	3	CLAMP, GROUND ROD	3503390	9313417
5	4	CLAMP, PARALLEL BRONZE	5962562	9320554
6	3	ROD, GROUND GALV 5/8" x 8'–0" LG	3503013	9313616
7	1	BOLT, MACHINE GALV 5/8" x 14" OR 16"	7001503 7001505	9309119 9320015
8	3	WASHER, CURVED 2 1/4" SQUARE	5997810	
9	10	WIRE, #2 7 STRAND SD COPPER, COVERED	4001042	9312556
10	1	CLIP, BONDING FOR 5/8" BOLT	5987955	9320450
11	1	NUT, SQUARE GALVANIZED 5/8"	5993400	9319911
12	1	PALNUT, GALVANIZED 5/8"	7024158	9322021
13	1	WASHER, SPRING CLIP FOR 5/8" BOLT	5997480	9319582
14	1	MOLDING, PLASTIC	3503053	9313613
15	5	STAPLES, 2" GALVANIZED	0811201	9314525
16	1	CLIP, BONDING FOR 3/4" BOLT	5987950	9313173
17	1	NUT, GALVANIZED 3/4"	5993410	9307167

NOTES:
1. PLACE SIX SECTIONS OF WIRE MESH AS SHOWN IN RELATION TO THE FULL HANDLE SWING.
2. JOIN EACH GRID SECTION WITH COPPER CRIMPITS, ITEM 2.
3. DOWNLEAD WIRE AND GROUND RODS SHOULD NOT TOUCHWIRE MESH.
4. GROUND RODS TO BE PLACED AS SHOWN IN SECTION B–B.
5. STRIP ENOUGH OF THE #2 COPPER COVERED WIRE TO MAKE A GOOD CONNECTION.

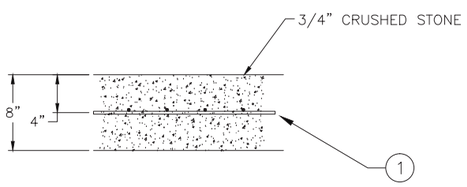

DETAIL 8

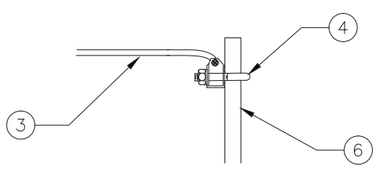

DETAIL 9

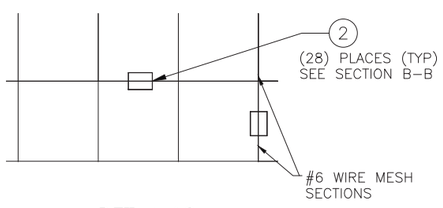

DETAIL 10

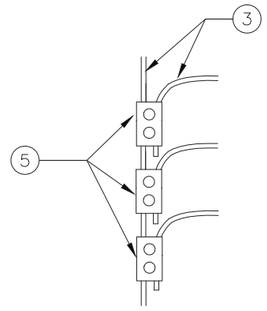

DETAIL 11

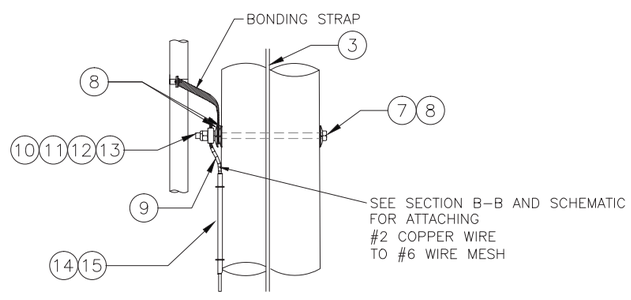

DETAIL 12

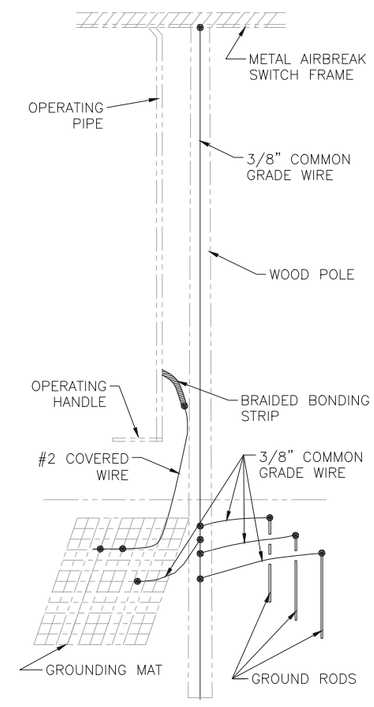

SCHEMATIC VIEW

VERSION	DATE	VERSION DESCRIPTION	PREPARED/REVISED	APPROVED
8	07/05/12	ADD SAP ITEM ID NUMBERS	SLB	MSB
9	09/10/13	ADDED GROUNDING LUG, CORRECTED VIEW AND SECTION REFERENCES	TEC KAD	LGS
10	11/25/13	SHEETS 2 & 5, CORRECT MATERIAL ITEM ID FOR GROUNDING LUG	TEC	
11	04/25/14	ADD DETAIL DESCRIPTIONS, ADD HOPE PIPE	TEC KAD	
12	09/19/14	CLARIFY DETAIL 4 AND CORRECT GROUND ROD CLAMP ITEM ID ON PAGE 2	TEC BMR	KAD
13	06/02/15	CHANGE WIRE MESH TO 40% CU CLAD, ADD NOTE 5 ON PAGE 2, ADD DETAILS 5 & 6	TEC BMR	KAD
14	11/30/15	ADD 2nd POLARM GROUNDING, ADD NOTE 2 PG. REMOVE STANDOFF BRACKETS, DETAILS 5 & 6	TEC BMR	KAD

VERSION 14

PRINTED 11/30/2015 10:30 AM

nationalgrid

PREPARED BY	JLC	02/02/10
REVIEWED BY	JME	02/02/10
APPROVED BY	MSB	02/02/10
SCALE	NONE	
SHEET	4 OF 6	
INDEX	SP.06.01.301	

TRANSMISSION LINE STANDARD

GROUNDING DETAILS FOR
WOOD SWITCH STRUCTURES

PRINTED COPIES ARE NOT DOCUMENT CONTROLLED. FOR THE LATEST AUTHORIZED VERSION PLEASE REFER TO THE ENGINEERING DEPARTMENT DOCUMENTS CABINET IN DOCUMENTUM

INCHES ON ORIGINAL

CONFIDENTIALITY STATEMENT: THIS DOCUMENT CONTAINS CONFIDENTIAL AND PROPRIETARY INFORMATION OF NATIONAL GRID. IT IS TO BE USED BY AUTHORIZED CONTRACTORS FOR NATIONAL GRID SOLELY IN CONNECTION WITH THE SPECIFIC PROJECT FOR WHICH IT HAS BEEN TRANSMITTED. ANY OTHER USE, ITS TRANSMITTAL TO THIRD PARTIES, OR ITS REPRODUCTION WITHOUT PRIOR EXPRESS WRITTEN AUTHORIZATION OF NATIONAL GRID IS STRICTLY PROHIBITED.

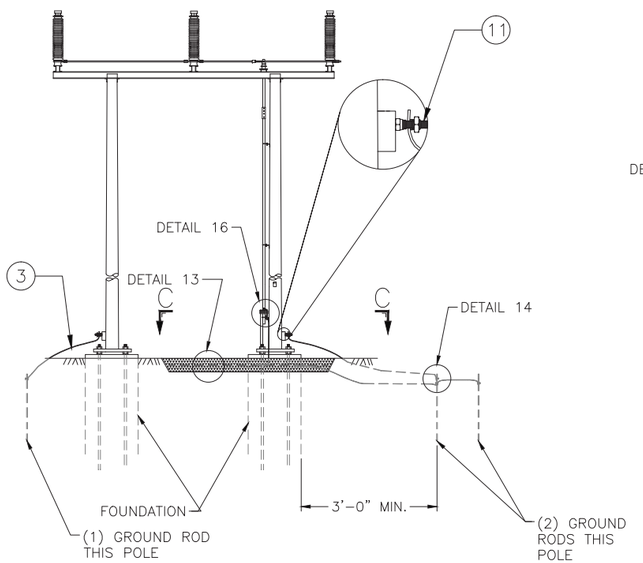

FRONT ELEVATION

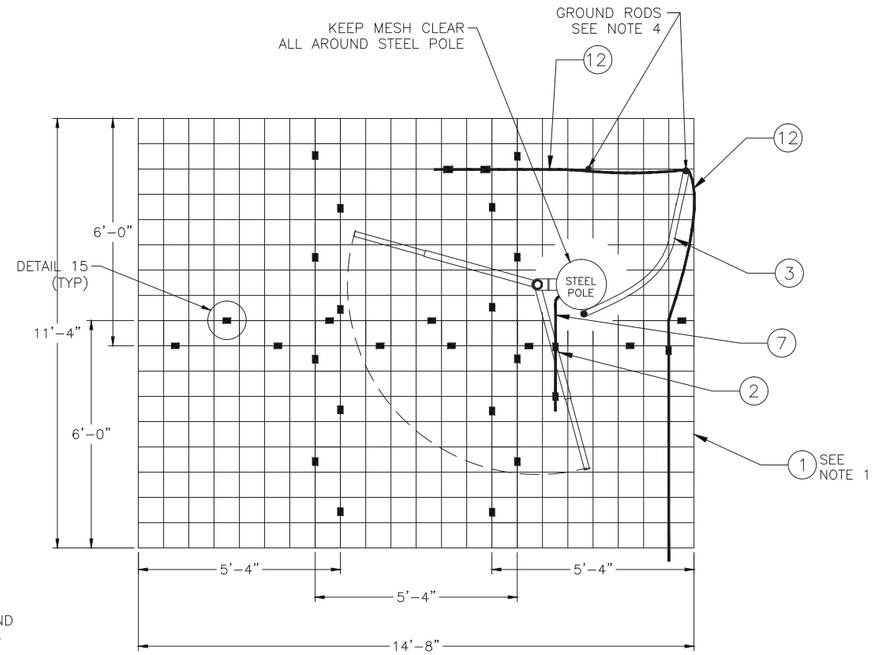

SECTION C–C

MATERIAL LIST				
ITEM	QUAN	DESCRIPTION	PS ITEM ID	SAP ITEM ID
1	6	#6 WIRE MESH, 8" SQUARES, 40% Cu CLAD 5'-4"x6'-0" FLAT MAT	9202952	9307626
2	31	COPPER CRIMPIT ("C" TYPE)	5105243	9309996
3	15	⅜" COMMON GRADE STEEL WIRE (FEET)	5998530	9306353
4	4	CLAMP, GROUND ROD	3503390	9313417
5	3	ROD, GROUND GALV ⅝" x 8'-0" LG	3503013	9313616
6	2	BOLT, MACHINE GALV ⅝" x 3"	5981388	9307344
7	10'	WIRE, #2 7 STRAND SD COPPER, COVERED	4001042	9312556
8	1	CLIP, BONDING FOR ⅝" BOLT	5987955	9320450
9	1	NUT, SQUARE GALVANIZED ⅝"	5993400	9319911
10	1	PALNUT, GALVANIZED ⅝"	7024158	9322021
11	2	LUG, GROUNDING, ½"	5961547	9313780
12	25	WIRE, #2 7 STRAND BARE SD COPPER	4015032	9315672

NOTES:
1. PLACE SIX SECTIONS OF WIRE MESH AS SHOWN IN RELATION TO THE FULL HANDLE SWING.
2. JOIN EACH GRID SQUARE WITH COPPER CRIMPITS, ITEM 2.
3. GROUNDING WIRE FROM STEEL POLE VANG SHOULD NOT TOUCH WIRE MESH.
4. STRIP ENOUGH OF THE #2 COPPER COVERED WIRE TO MAKE A GOOD CONNECTION.

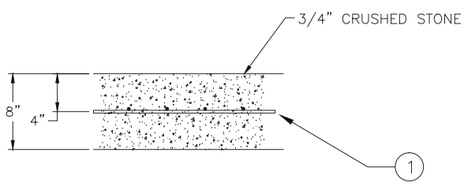

DETAIL 13

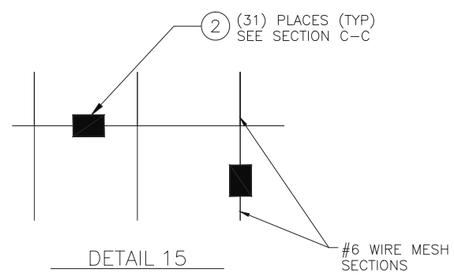

DETAIL 15

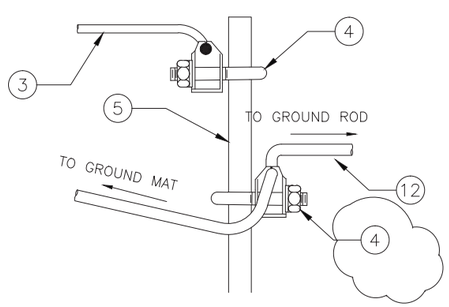

DETAIL 14

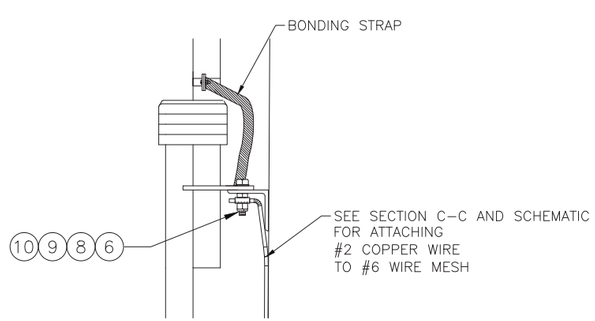

DETAIL 16

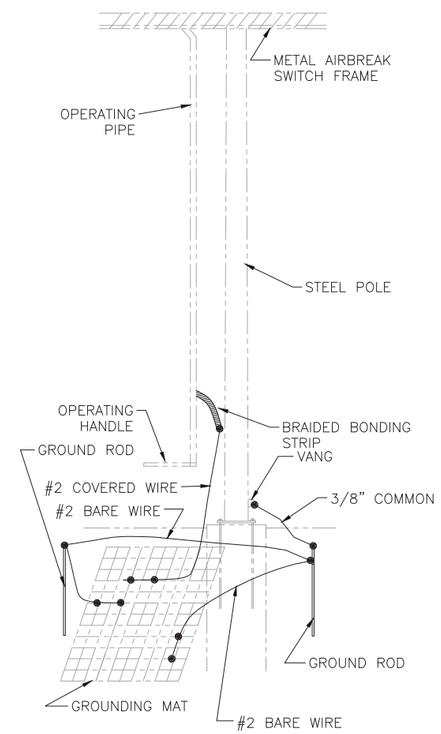

SCHEMATIC VIEW

VERSION	DESCRIPTION	PREPARED/REVIEWED/APPROVED
14	VERSION DESCRIPTION	SLB MSB
		TEC KAD LGS
		TEC KAD
		TEC KAD
		TEC BMR KAD
		TEC BMR KAD
		TEC BMR KAD

VER	DATE	
8	07/05/12	ADD SAP ITEM ID NUMBERS
9	09/10/13	ADDED GROUNDING LUG, CORRECTED VIEW AND SECTION REFERENCES
10	11/25/13	SHEETS 2 & 5, CORRECT MATERIAL ITEM ID FOR GROUNDING LUG
11	04/25/14	ADD DETAIL DESCRIPTIONS, ADD HOPE PIPE
12	09/19/14	CLARIFY DETAIL 4 AND CORRECT GROUND ROD CLAMP ITEM ID ON PAGE 2
13	06/02/15	CHANGE WIRE TYPE TO 7 STRAND, ADD DETAILS 4 & 5
14	11/30/15	ADD 2nd POLARM GROUNDING B.1, ADD NOTE 2 P.6, REMOVE STANDOFF BRACKETS DETAILS P.6

nationalgrid

PREPARED BY	JLC	02/02/10
REVIEWED BY	JME	02/02/10
APPROVED BY	MSB	02/02/10
SCALE	NONE	
SHEET	5 OF 6	
INDEX	SP.06.01.301	

TRANSMISSION LINE STANDARD

GROUNDING DETAILS FOR STEEL SWITCH STRUCTURES

PRINTED COPIES ARE NOT DOCUMENT CONTROLLED. FOR THE LATEST AUTHORIZED VERSION PLEASE REFER TO THE ENGINEERING DEPARTMENT DOCUMENTS CABINET IN DOCUMENTUM

PRINTED 11/30/2015 10:30 AM

INCHES ON ORIGINAL

CONFIDENTIALITY STATEMENT: THIS DOCUMENT CONTAINS CONFIDENTIAL AND PROPRIETARY INFORMATION OF NATIONAL GRID. IT IS TO BE USED BY AUTHORIZED CONTRACTORS FOR NATIONAL GRID SOLELY IN CONNECTION WITH THE SPECIFIC PROJECT FOR WHICH IT HAS BEEN TRANSMITTED. ANY OTHER USE, ITS TRANSMITTAL TO THIRD PARTIES, OR ITS REPRODUCTION WITHOUT PRIOR EXPRESS WRITTEN AUTHORIZATION OF NATIONAL GRID IS STRICTLY PROHIBITED.

NOTES
1. ALL WOOD POLES SHALL BE INSTALLED IN CORRUGATED METAL PIPES UNLESS STATED OTHERWISE IN THE CONSTRUCTION FIELD ISSUE, OR WHERE APPROVED ON A SITE SPECIFIC BASIS BY THE ENGINEER
2. WHERE WOOD POLES ARE NOT INSTALLED IN CORRUGATED METAL PIPE, THE ALTERNATE GROUNDING CONFIGURATIONS IDENTIFIED IN THIS SHEET SHALL BE USED
3. IF THESE ALTERNATE DETAILS ARE USED, TESTING OF GROUND RESISTANCE SHALL PROCEED AS NORMAL. THE INSTALLER SHALL USE THE SAME PROCEDURE AS FOR POLES INSTALLED IN CORRUGATED METAL PIPES.

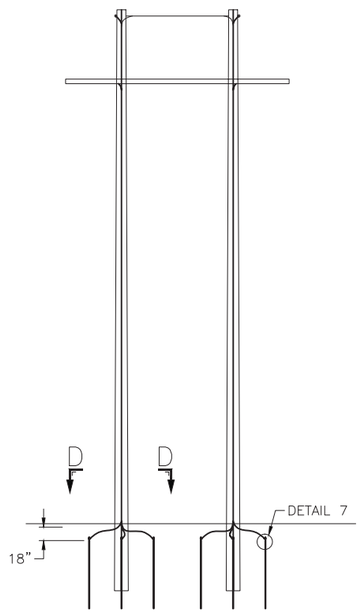

H-FRAME
BONDED CROSSARM

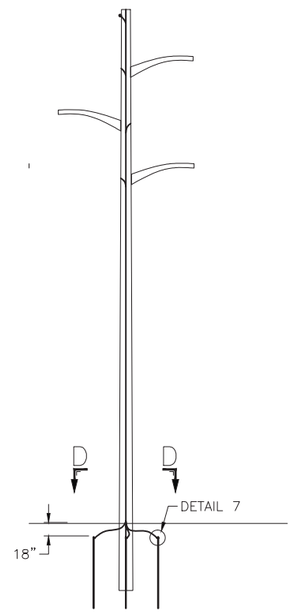

SINGLE POLE

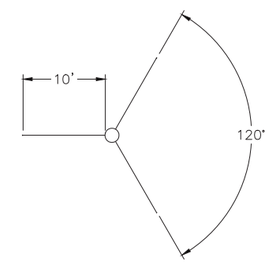

SECTION D-D

SECTION E-E

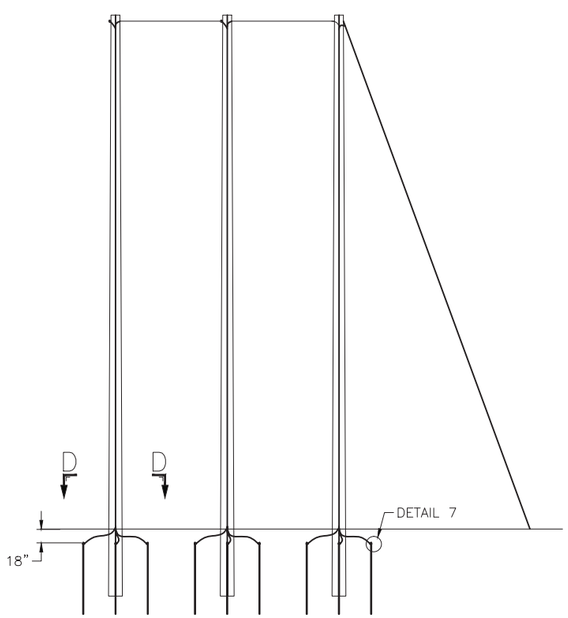

3 POLE STRUCTURE
W/ POLE DOWNLEAD

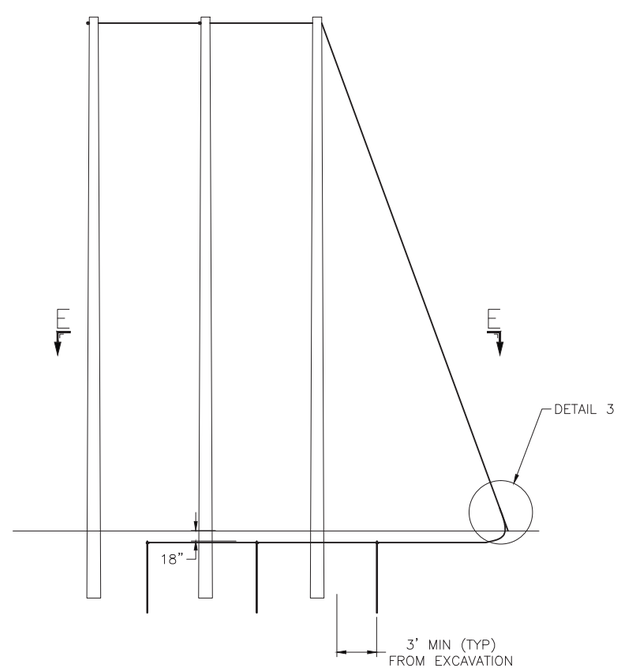

3 POLE STRUCTURE
W/O POLE DOWNLEAD

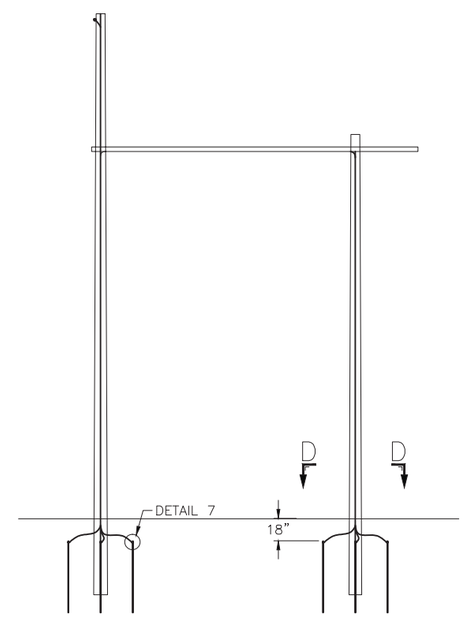

POLARM
BONDED CROSSARM

VER	DATE	VERSION DESCRIPTION	PREPARED BY	REVIEWED BY	APPROVED BY
8	07/05/12	ADD SAP ITEM ID NUMBERS	SLB	MSB	
9	09/10/13	ADDED GROUNDING LUG, CORRECTED VIEW AND SECTION REFERENCES	TEC	KAD	LGS
10	11/25/13	SHEETS 2 & 5, CORRECT MATERIAL ITEM ID FOR GROUNDING LUG	TEC		
11	04/25/14	ADD DETAIL DESCRIPTIONS, ADD HDPE PIPE	TEC	KAD	
12	09/19/14	CLARIFY DETAIL 4 AND CORRECT GROUND ROD CLAMP ITEM ID ON PAGE 2	TEC	BMR	KAD
13	06/02/15	CHANGE WIRE TYPE FROM #6 TO #4 AS-OF ATMAS SHEETS 4 & 5	TEC	BMR	KAD
14	11/30/15	ADD 2nd POLARM GROUNDING P.1, ADD NOTE 2 P.6, REMOVE STANDOFF BRACKET DETAILS P.6	TEC	BMR	KAD

VERSION 14

nationalgrid

PREPARED BY	JLC 02/02/10
REVIEWED BY	JME 02/02/10
APPROVED BY	MSB 02/02/10
SCALE	NONE
SHEET	6 OF 6
INDEX	SP.06.01.301

TRANSMISSION LINE STANDARD

ALTERNATE GROUNDING DETAILS INSTALLATIONS WITHOUT STEEL CULVERT

PRINTED COPIES ARE NOT DOCUMENT CONTROLLED. FOR THE LATEST AUTHORIZED VERSION PLEASE REFER TO THE ENGINEERING DEPARTMENT DOCUMENTS CABINET IN DOCUMENTUM

PRINTED 11/30/2015 10:30 AM

INCHES ON ORIGINAL

400298-C-P-01

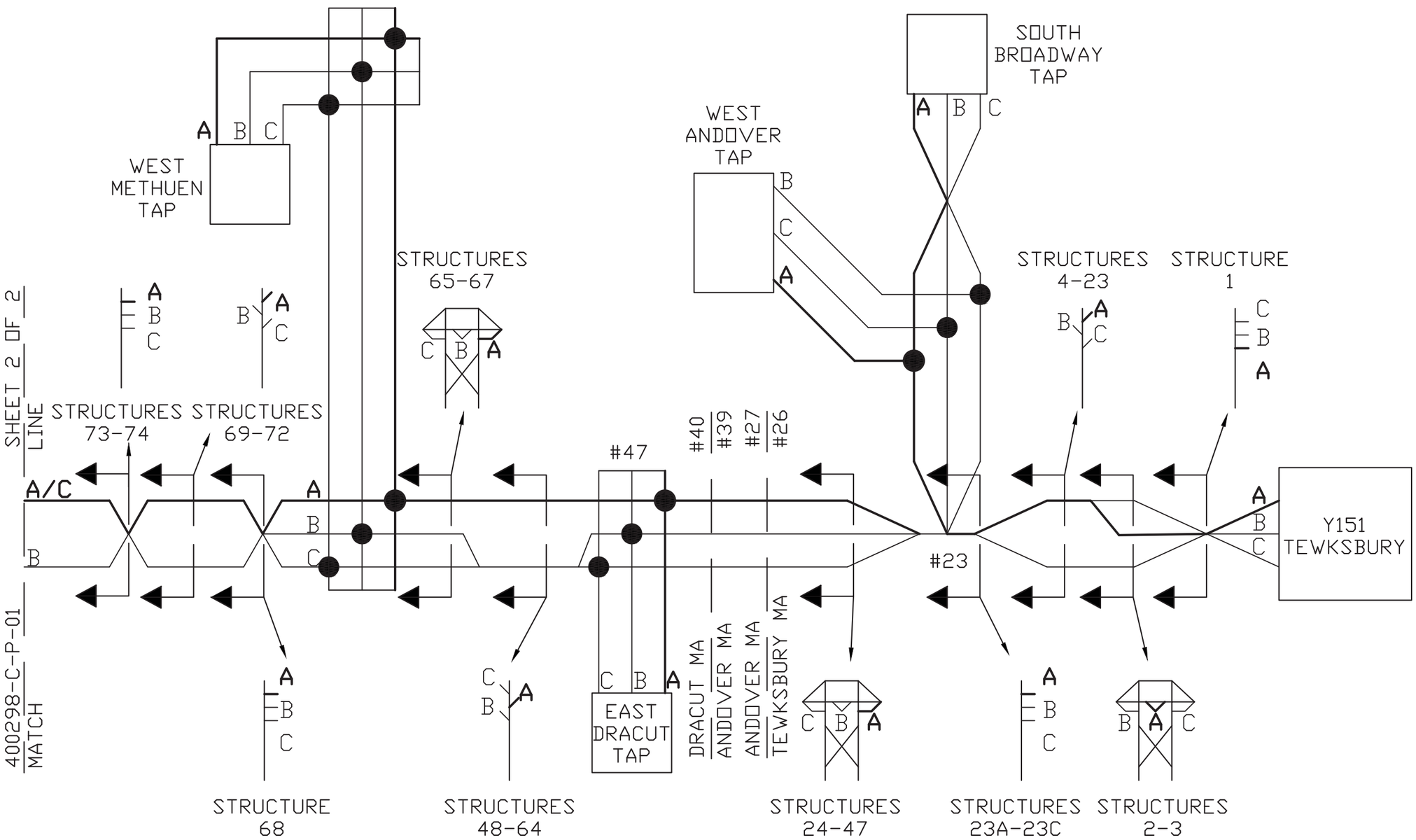

PHASING DIAGRAM

115KV Y151 LINE
TEWKSBURY 22 SUBSTATION
TO EVERSOURCE TRANSFER

nationalgrid

PREPARED BY	EJJ	09/19/14
REVIEWED BY	FTX	09/19/14
APPROVED BY	NPA	09/19/14
SCALE	N.T.S	
SHEET	1 OF 2	
INDEX	400298	

PREPARED	REVIEWED	APPROVED
EJJ	FTX	NPA
EJJ	FTX	NPA
MKB	FTX	NPA
DRD	GC	NPA

VERSION 4

VER	DATE	VERSION DESCRIPTION
1	09/19/14	ISSUED FOR SCOPE DOCUMENT
2	05/22/15	ISSUED FOR PERMITTING
3	02/05/16	REVISED FOR PERMITTING
4	10/31/17	AS-BUILT AND ISSUED FOR NHSEC RECORD

CONFIDENTIALITY STATEMENT: THIS DOCUMENT CONTAINS CONFIDENTIAL AND PROPRIETARY INFORMATION OF NATIONAL GRID. IT IS TO BE USED BY AUTHORIZED CONTRACTORS FOR NATIONAL GRID SOLELY IN CONNECTION WITH THE SPECIFIC PROJECT FOR WHICH IT HAS BEEN TRANSMITTED. ANY OTHER USE, ITS TRANSMITTAL TO THIRD PARTIES, OR ITS REPRODUCTION WITHOUT PRIOR EXPRESS WRITTEN AUTHORIZATION OF NATIONAL GRID IS STRICTLY PROHIBITED.

PRINTED COPIES ARE NOT DOCUMENT CONTROLLED. FOR THE LATEST AUTHORIZED VERSION PLEASE REFER TO THE ENGINEERING DEPARTMENT DOCUMENTS CABINET IN DOCUMENTUM PRINTED 10/31/2017 7:43 AM

INCHES ON ORIGINAL

400298-C-P-01

CONFIDENTIALITY STATEMENT: THIS DOCUMENT CONTAINS CONFIDENTIAL AND PROPRIETARY INFORMATION OF NATIONAL GRID. IT IS TO BE USED BY AUTHORIZED CONTRACTORS FOR NATIONAL GRID SOLELY IN CONNECTION WITH THE SPECIFIC PROJECT FOR WHICH IT HAS BEEN TRANSMITTED. ANY OTHER USE, ITS TRANSMITTAL TO THIRD PARTIES, OR ITS REPRODUCTION WITHOUT PRIOR EXPRESS WRITTEN AUTHORIZATION OF NATIONAL GRID IS STRICTLY PROHIBITED.

VER	DATE	VERSION DESCRIPTION	PREPARED	REVIEWED	APPROVED
2	05/22/15	ISSUED FOR PERMITTING	EJJ	FTX	NPA
3	06/08/15	ISSUED FOR SCOPE DOCUMENT	DD	FTX	NPA
4	02/05/16	REVISED FOR PERMITTING	MKB	FTX	NPA
5	10/31/17	AS-BUILT AND ISSUED FOR NHSEC RECORD	DRD	GC	NPA

VERSION 5

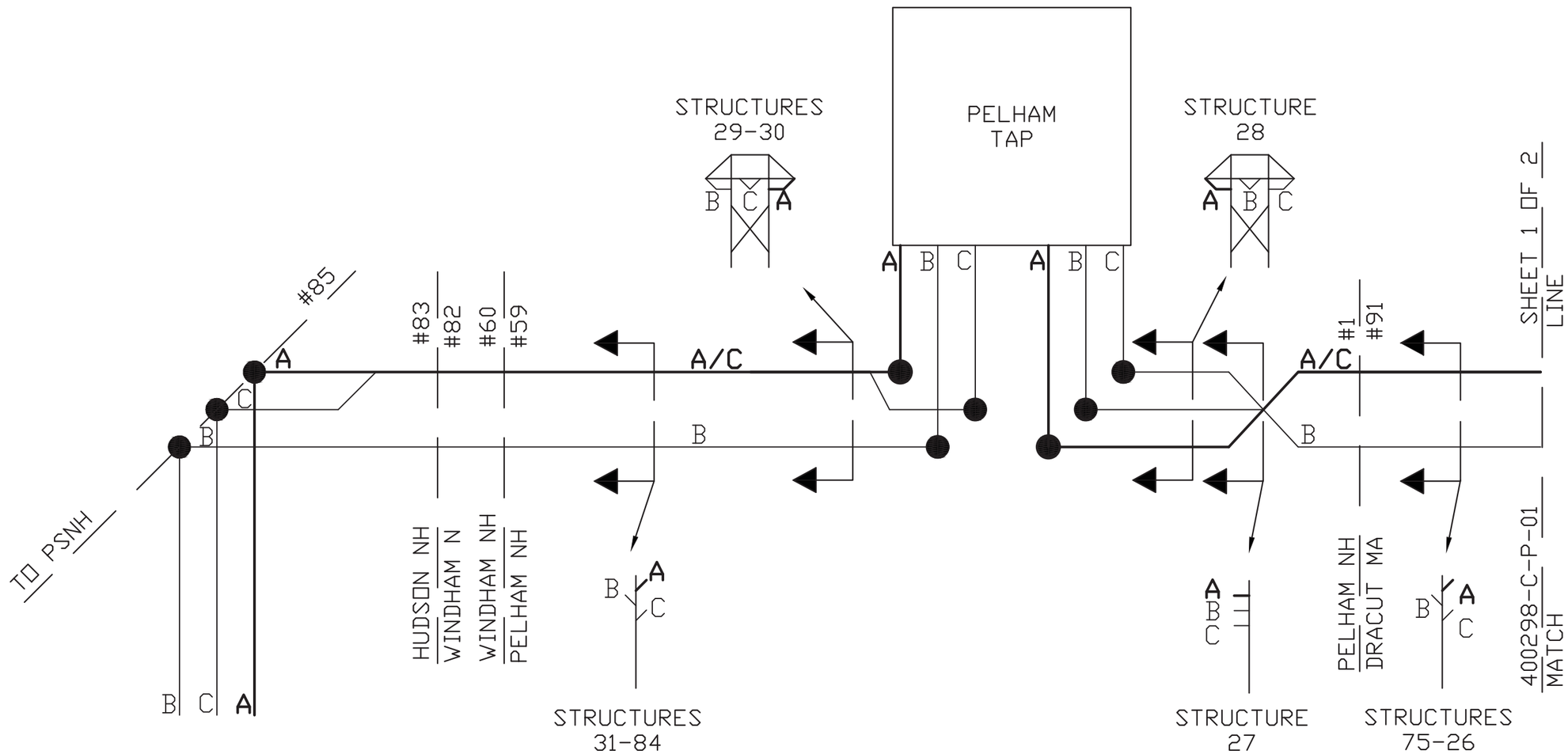

PHASING DIAGRAM

115KV Y151 LINE
TEWKSBURY 22 SUBSTATION
TO EVERSOURCE TRANSFER

PREPARED BY	DD	05/22/16
REVIEWED BY	FTX	05/22/16
APPROVED BY	NPA	05/22/16
SCALE	N.T.S	
SHEET	2 OF 2	
INDEX	400298	

nationalgrid

PRINTED COPIES ARE NOT DOCUMENT CONTROLLED. FOR THE LATEST AUTHORIZED VERSION PLEASE REFER TO THE ENGINEERING DEPARTMENT DOCUMENTS CABINET IN DOCUMENTUM PRINTED 10/31/2017 7:41 AM

INCHES ON ORIGINAL

400298-C-P-01

400298-C-P-01

CONFIDENTIALITY STATEMENT: THIS DOCUMENT CONTAINS CONFIDENTIAL AND PROPRIETARY INFORMATION OF NATIONAL GRID. IT IS TO BE USED BY AUTHORIZED CONTRACTORS FOR NATIONAL GRID SOLELY IN CONNECTION WITH THE SPECIFIC PROJECT FOR WHICH IT HAS BEEN TRANSMITTED. ANY OTHER USE, ITS TRANSMITTAL TO THIRD PARTIES, OR ITS REPRODUCTION WITHOUT PRIOR EXPRESS WRITTEN AUTHORIZATION OF NATIONAL GRID IS STRICTLY PROHIBITED.

VER	DATE	VERSION DESCRIPTION	PREPARED	REVIEWED	APPROVED	VERSION
1	09/19/14	ISSUED FOR SCOPE DOCUMENT	EJJ	FTX	NPA	3
2	05/22/15	ISSUED FOR PERMITTING	JLM	FTX	NPA	
3	10/31/17	AS-BUILT AND ISSUED FOR NHSEC RECORD	DRD	GC	NPA	
4						

400298-C-P-05

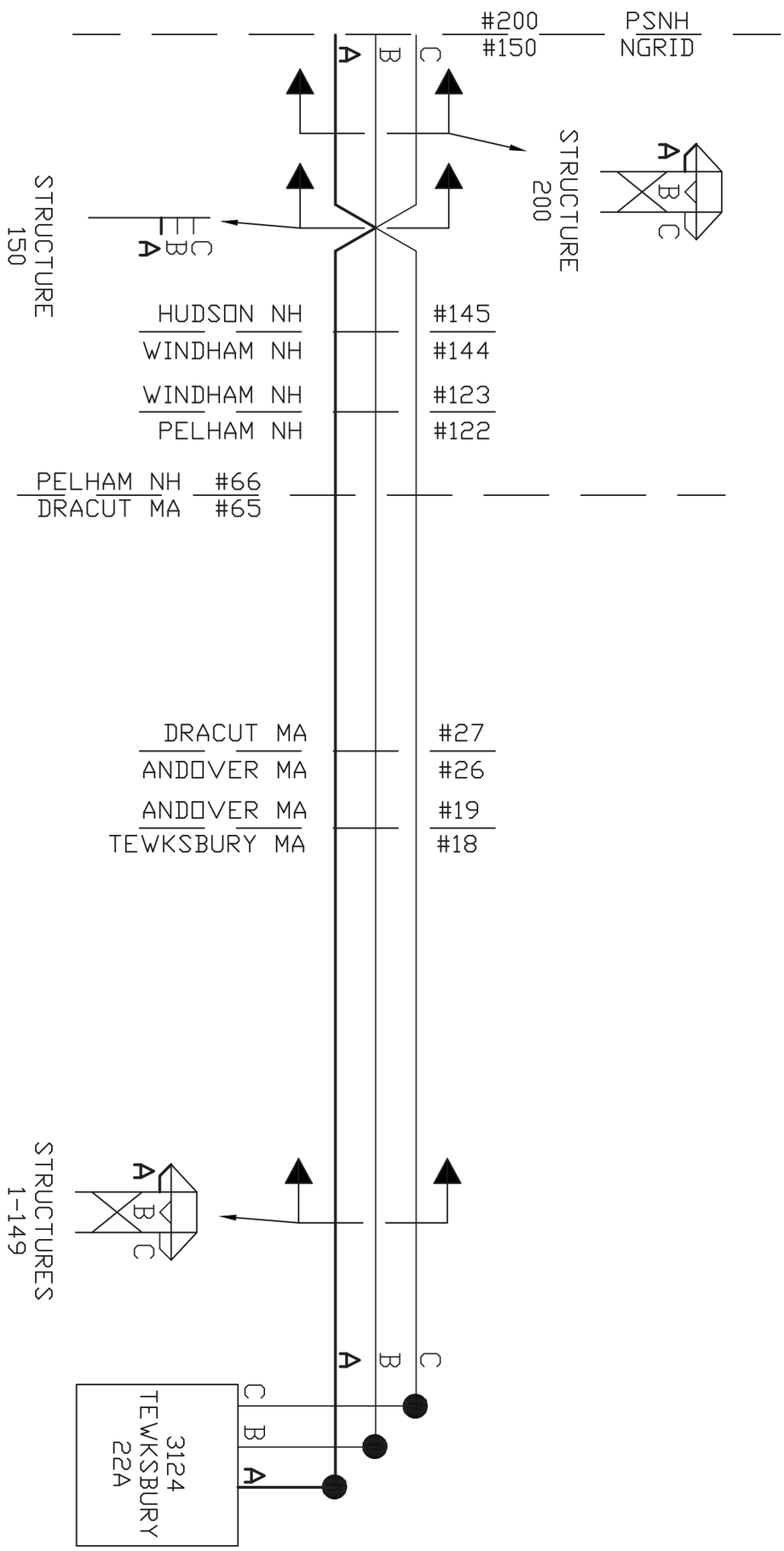

PHASING DIAGRAM

345KV 3124 LINE
TEWKSBURY 22A SUBSTATION
TO EVERSOURCE TRANSFER

PREPARED BY	DD	05/13/16
REVIEWED BY	FTX	05/13/16
APPROVED BY	NPA	05/13/16
SCALE	N.T.S	
SHEET	1 OF 1	
INDEX		

nationalgrid

INCHES ON ORIGINAL

400298-C-P-05

PRINTED COPIES ARE NOT DOCUMENT CONTROLLED. FOR THE LATEST AUTHORIZED VERSION PLEASE REFER TO THE ENGINEERING DEPARTMENT DOCUMENTS CABINET IN DOCUMENTUM PRINTED 10/31/2017 7:00 AM

CONFIDENTIALITY STATEMENT: THIS DOCUMENT CONTAINS CONFIDENTIAL AND PROPRIETARY INFORMATION OF NATIONAL GRID. IT IS TO BE USED BY AUTHORIZED CONTRACTORS FOR NATIONAL GRID SOLELY IN CONNECTION WITH THE SPECIFIC PROJECT FOR WHICH IT HAS BEEN TRANSMITTED. ANY OTHER USE, ITS TRANSMITTAL TO THIRD PARTIES, OR ITS REPRODUCTION WITHOUT PRIOR EXPRESS WRITTEN AUTHORIZATION OF NATIONAL GRID IS STRICTLY PROHIBITED.

VER	DATE	VERSION DESCRIPTION	PREPARED	REVIEWED	APPROVED
2	04/11/14	ISSUED AS FINAL	DSF	SMP	NPA
3	08/01/14	ISSUED FOR SCOPE DOCUMENT	RE	FTX	NPA
4	10/06/14	ISSUED FOR PERMITTING	DTN	FTX	NPA
5	10/31/17	AS-BUILT AND ISSUED FOR NHSEC RECORD	DRD	GC	NPA

VERSION 5

400298-C-X-08(E)

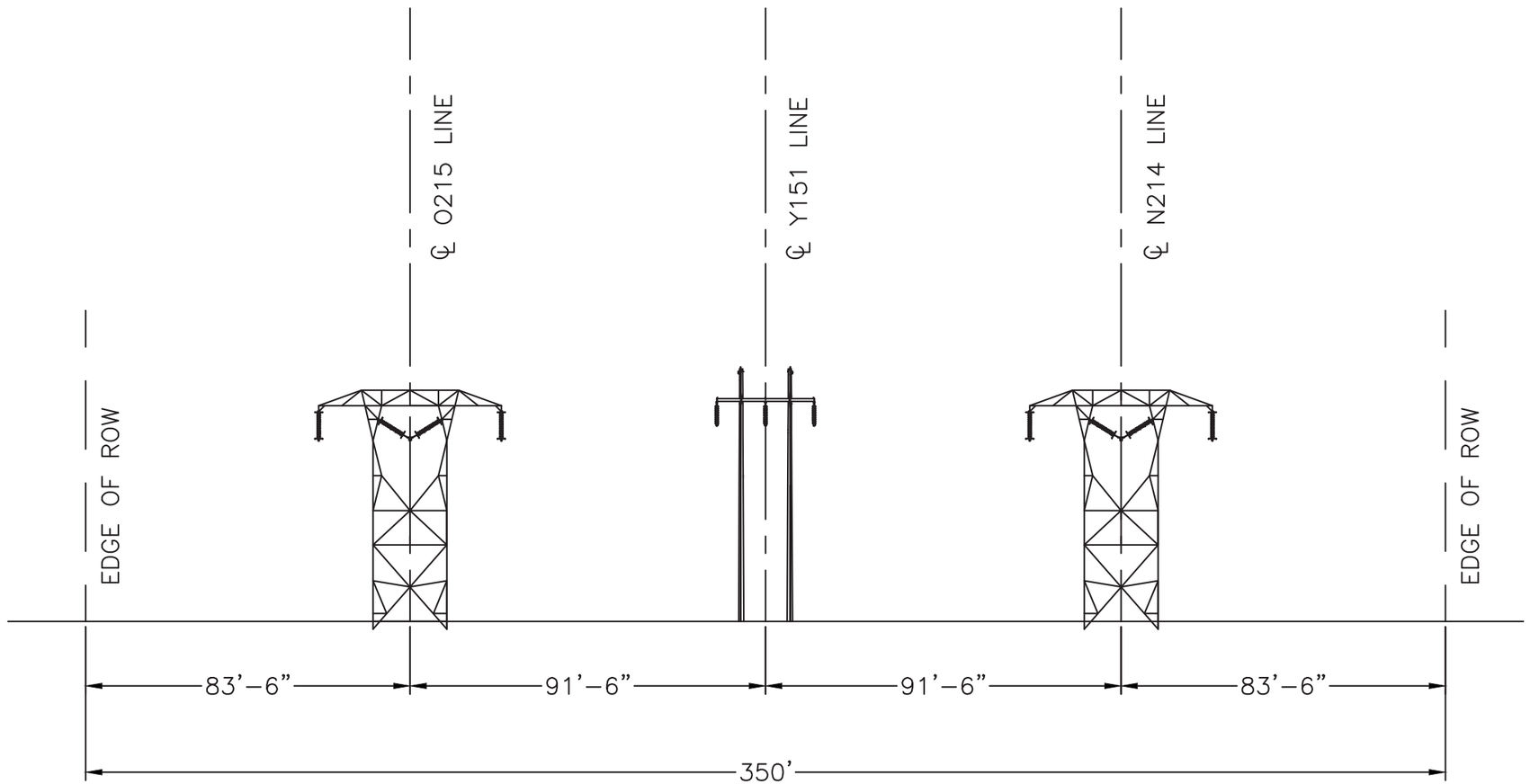

CROSS-SECTION FACING SCOBIE JUNCTION
MILE 4.82 TO MILE 14.17
EXISTING CONDITIONS
T-1554 THROUGH T-1546

INCHES ON ORIGINAL

PREPARED BY	DTN	10/06/14
REVIEWED BY	FTX	10/06/14
APPROVED BY	NPA	10/06/14
SCALE	NONE	
SHEET	1 OF 1	
INDEX	400298	

nationalgrid

TRANSMISSION LINE X-SECTION

SCOBIE POND (EVERSOURCE TRANS) TO TEWKSBURY
FIFTEEN MILE FALLS TO TEWSKBURY ROW
EXISTING CROSS SECTION 8
MILE 4.82 TO 14.17

400298-C-X-08(E)

PRINTED COPIES ARE NOT DOCUMENT CONTROLLED. FOR THE LATEST AUTHORIZED VERSION PLEASE REFER TO THE ENGINEERING DEPARTMENT DOCUMENTS CABINET IN DOCUMENTUM PRINTED 10/30/2017 12:27 PM

CONFIDENTIALITY STATEMENT: THIS DOCUMENT CONTAINS CONFIDENTIAL AND PROPRIETARY INFORMATION OF NATIONAL GRID. IT IS TO BE USED BY AUTHORIZED CONTRACTORS FOR NATIONAL GRID SOLELY IN CONNECTION WITH THE SPECIFIC PROJECT FOR WHICH IT HAS BEEN TRANSMITTED. ANY OTHER USE, ITS TRANSMITTAL TO THIRD PARTIES, OR ITS REPRODUCTION WITHOUT PRIOR EXPRESS WRITTEN AUTHORIZATION OF NATIONAL GRID IS STRICTLY PROHIBITED.

VER	DATE	VERSION DESCRIPTION
2	04/11/14	ISSUED AS FINAL
3	08/01/14	ISSUED FOR SCOPE DOCUMENT
4	10/06/14	ISSUED FOR PERMITTING
5	10/31/17	AS-BUILT AND ISSUED FOR NHSEC RECORD

	PREPARED	REVIEWED	APPROVED
	DSF	SMP	NPA
	RE	FTX	NPA
	DTN	FTX	NPA
	DRD	GC	NPA

VERSION 5

400298-C-X-08(P)

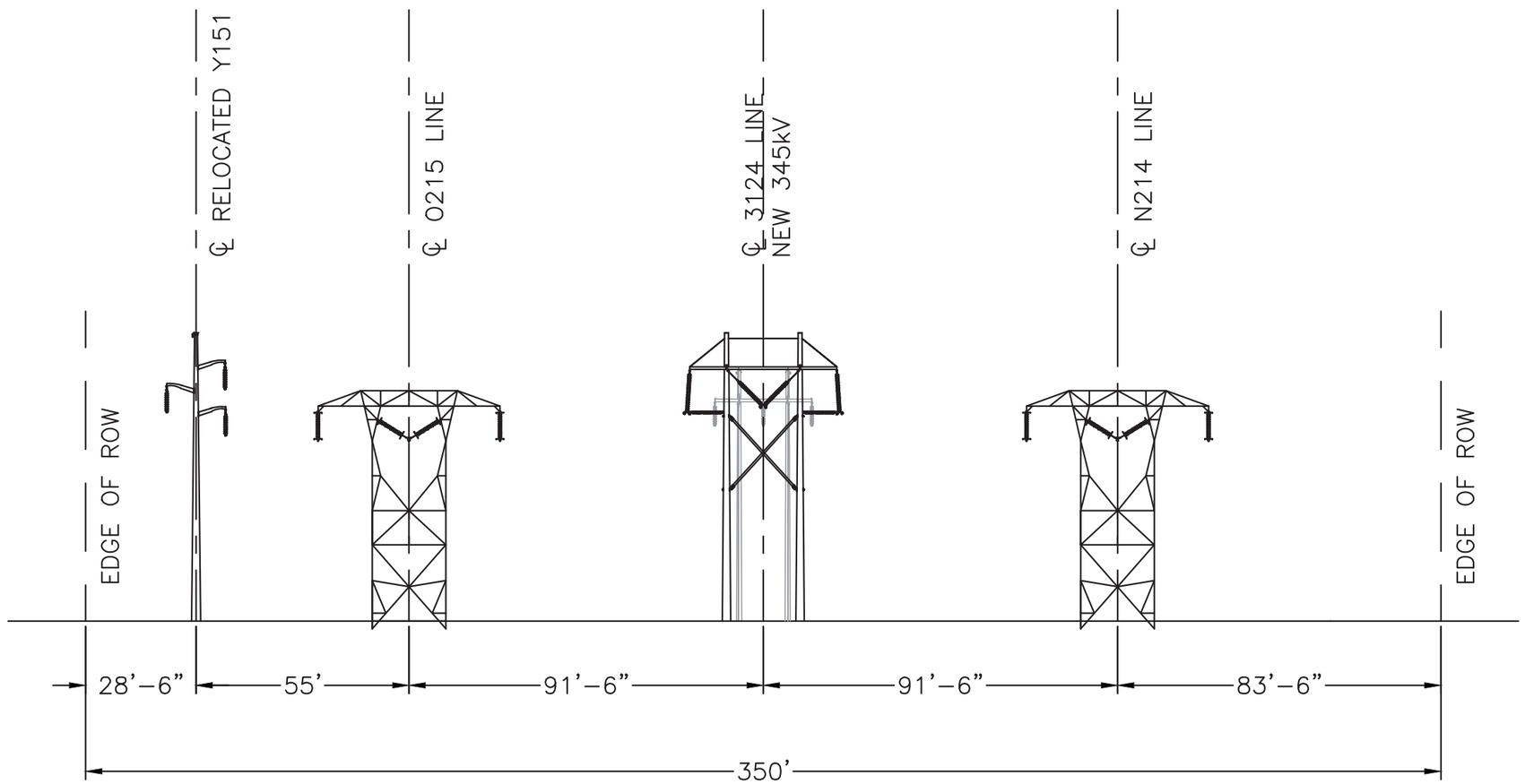

CROSS-SECTION FACING SCOBIE JUNCTION
MILE 4.82 TO MILE 14.17
PROPOSED CONDITIONS
T-1554 THROUGH T-1546

INCHES ON ORIGINAL

400298-C-X-08(P)

nationalgrid

PREPARED BY	DTN	10/06/14
REVIEWED BY	FTX	10/06/14
APPROVED BY	NPA	10/06/14
SCALE	NONE	
SHEET	1 OF 1	
INDEX	400298	

TRANSMISSION LINE X-SECTION

SCOBIE POND (EVERSOURCE TRANS) TO TEWKSBURY
FIFTEEN MILE FALLS TO TEWSKBURY ROW
PROPOSED CROSS SECTION 8
MILE 4.82 TO 14.17

PRINTED COPIES ARE NOT DOCUMENT CONTROLLED. FOR THE LATEST AUTHORIZED VERSION PLEASE REFER TO THE ENGINEERING DEPARTMENT DOCUMENTS CABINET IN DOCUMENTUM PRINTED 10/30/2017 12:27 PM

CONFIDENTIALITY STATEMENT: THIS DOCUMENT CONTAINS CONFIDENTIAL AND PROPRIETARY INFORMATION OF NATIONAL GRID. IT IS TO BE USED BY AUTHORIZED CONTRACTORS FOR NATIONAL GRID SOLELY IN CONNECTION WITH THE SPECIFIC PROJECT FOR WHICH IT HAS BEEN TRANSMITTED. ANY OTHER USE, ITS TRANSMITTAL TO THIRD PARTIES, OR ITS REPRODUCTION WITHOUT PRIOR EXPRESS WRITTEN AUTHORIZATION OF NATIONAL GRID IS STRICTLY PROHIBITED.

VER	DATE	VERSION DESCRIPTION	PREPARED	REVIEWED	APPROVED	VERSION
2	04/11/14	ISSUED AS FINAL	DSF	SMP	NPA	5
3	08/01/14	ISSUED FOR SCOPE DOCUMENT	RE	FTX	NPA	
4	10/06/14	ISSUED FOR PERMITTING	DTN	FTX	NPA	
5	10/31/17	AS-BUILT AND ISSUED FOR NHSEC RECORD	DRD	GC	NPA	

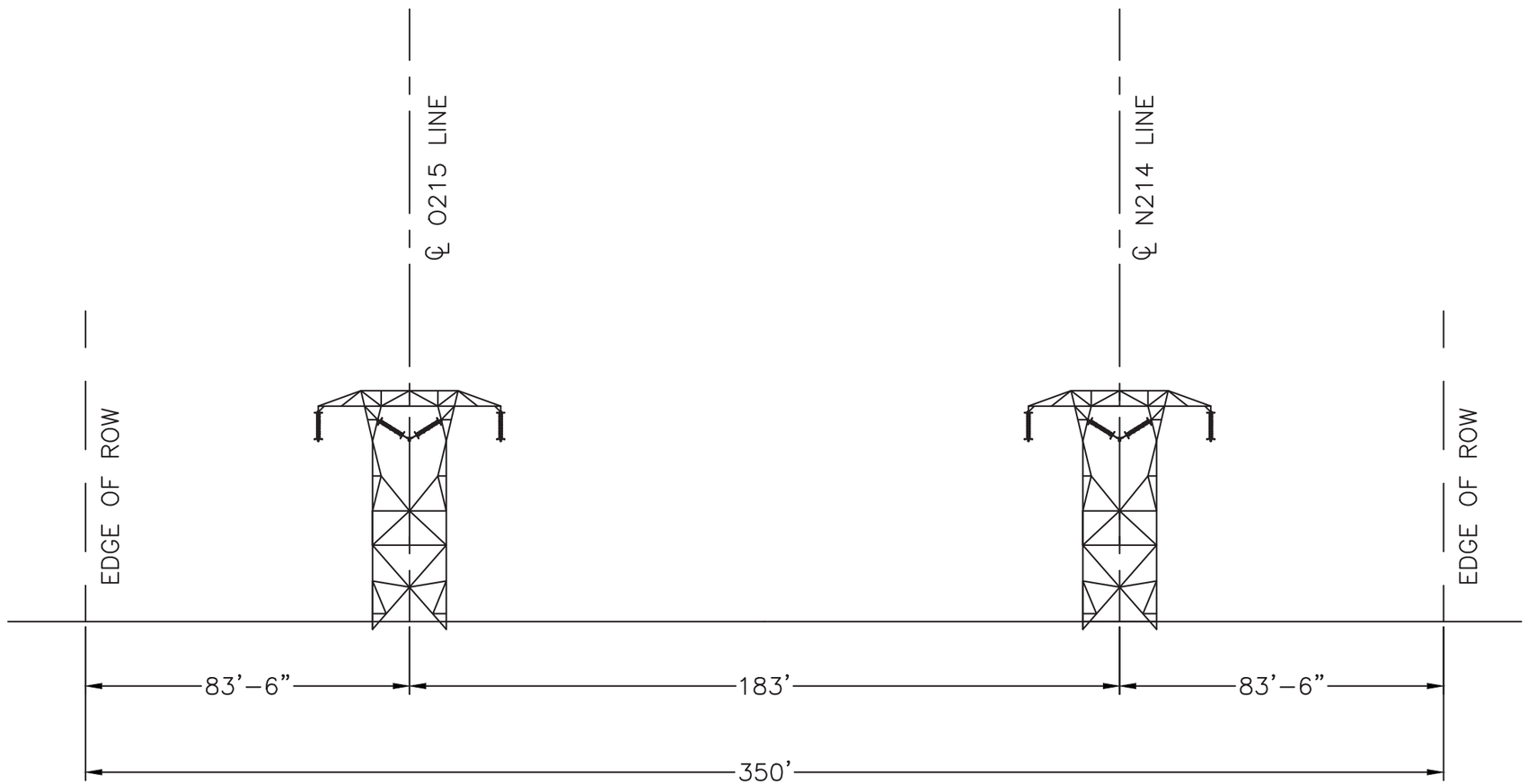

CROSS-SECTION FACING SCOBIE JUNCTION
MILE 14.17 TO MILE 14.6
EXISTING CONDITIONS
T-1546

INCHES ON ORIGINAL

400298-C-X-09(E)

nationalgrid

PREPARED BY	DTN 10/06/14
REVIEWED BY	FTX 10/06/14
APPROVED BY	NPA 10/06/14
SCALE	NONE
SHEET	1 OF 1
INDEX	400298

TRANSMISSION LINE X-SECTION

SCOBIE POND (EVERSOURCE TRANS) TO TEWKSBURY
FIFTEEN MILE FALLS TO TEWSKBURY ROW
EXISTING CROSS SECTION 9
MILE 14.17 TO 14.6

PRINTED COPIES ARE NOT DOCUMENT CONTROLLED. FOR THE LATEST AUTHORIZED VERSION PLEASE REFER TO THE ENGINEERING DEPARTMENT DOCUMENTS CABINET IN DOCUMENTUM PRINTED 10/30/2017 2:03 PM

400298-C-X-09(E)

CONFIDENTIALITY STATEMENT: THIS DOCUMENT CONTAINS CONFIDENTIAL AND PROPRIETARY INFORMATION OF NATIONAL GRID. IT IS TO BE USED BY AUTHORIZED CONTRACTORS FOR NATIONAL GRID SOLELY IN CONNECTION WITH THE SPECIFIC PROJECT FOR WHICH IT HAS BEEN TRANSMITTED. ANY OTHER USE, ITS TRANSMITTAL TO THIRD PARTIES, OR ITS REPRODUCTION WITHOUT PRIOR EXPRESS WRITTEN AUTHORIZATION OF NATIONAL GRID IS STRICTLY PROHIBITED.

VER	DATE	VERSION DESCRIPTION
1	05/01/14	ISSUED AS FINAL
2	08/01/14	ISSUED FOR SCOPE DOCUMENT
3	10/06/14	ISSUED FOR PERMITTING
4	10/31/17	AS-BUILT AND ISSUED FOR NHSEC RECORD

	PREPARED	REVIEWED	APPROVED
	DSF	SMP	NPA
	RE	FTX	NPA
	DTN	FTX	NPA
	DRD	GC	NPA

VERSION 4

400298-C-X-09(P)

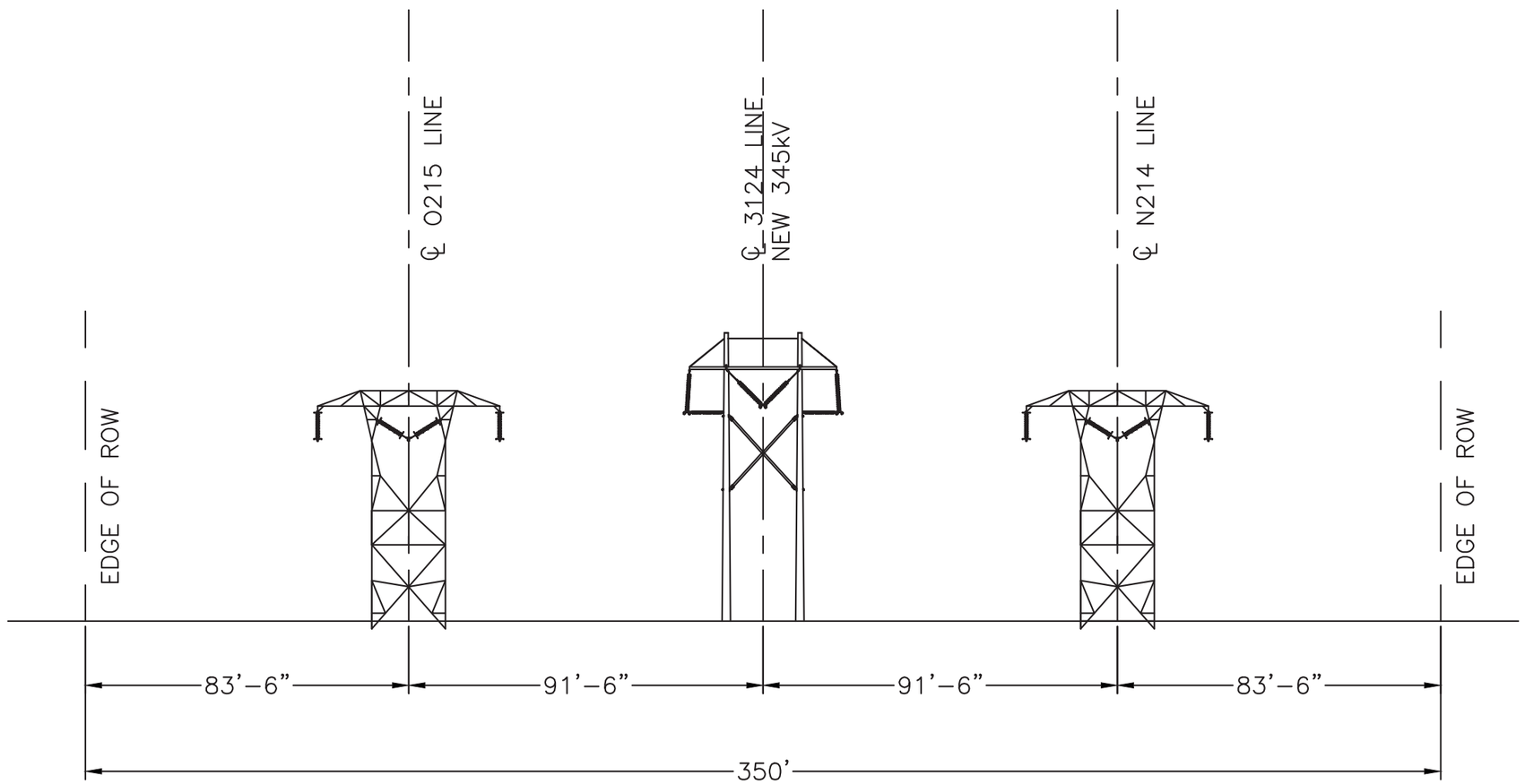

CROSS-SECTION FACING SCOBIE JUNCTION
MILE 14.17 TO MILE 14.6
PROPOSED CONDITIONS
T-1546

INCHES ON ORIGINAL

400298-C-X-09(P)

nationalgrid

PREPARED BY	DTN	10/06/14
REVIEWED BY	FTX	10/06/14
APPROVED BY	NPA	10/06/14
SCALE	NONE	
SHEET	1 OF 1	
INDEX	400298	

TRANSMISSION LINE X-SECTION

SCOBIE POND (EVERSOURCE TRANS) TO TEWKSBURY
FIFTEEN MILE FALLS TO TEWSKBURY ROW
PROPOSED CROSS SECTION 9
MILE 14.17 TO MILE 14.6

PRINTED COPIES ARE NOT DOCUMENT CONTROLLED. FOR THE LATEST AUTHORIZED VERSION PLEASE REFER TO THE ENGINEERING DEPARTMENT DOCUMENTS CABINET IN DOCUMENTUM PRINTED 10/30/2017 2:05 PM

EVERSOURCE
LINE 3124 345 kV TRANSMISSION

EVERSOURCE ENERGY

TRC DRAWING NO. S3124-T0001-SH.1

EVERSOURCE

LINE 3124 345 kV TRANSMISSION

DRAWING INDEX

DRAWING NO.	REVISION NO.	DESCRIPTION
S3124–T0001 SH.1	2	COVER SHEET
S3124–T0001 SH.2	2	DRAWING INDEX
312443101	2	KEY SHEET
S3124–T0001 SH.3	2	STRUCTURE OUTLINE
S3124–T0001 SH.4	2	PHASING DIAGRAM
S3124–T0001 SH.5	2	LEGEND AND NOTES
312443001 SH.1	2	PLAN AND PROFILE
312443001 SH.2	2	PLAN AND PROFILE
312443001 SH.3	2	PLAN AND PROFILE
312443001 SH.4	2	PLAN AND PROFILE
312443001 SH.5	2	PLAN AND PROFILE
312443001 SH.6	2	PLAN AND PROFILE
312443001 SH.7	2	PLAN AND PROFILE
312443001 SH.8	2	PLAN AND PROFILE
312443001 SH.9	2	PLAN AND PROFILE
312443001 SH.10	2	PLAN AND PROFILE
312405001	2	SEA–HF FRAMING DETAIL
312405002 SH.1	2	SEB–1 FRAMING DETAIL
312405002 SH.2	2	SEB–1 FRAMING DETAIL
312405003 SH.1	2	SEC–1 FRAMING DETAIL
312405003 SH.2	2	SEC–1 FRAMING DETAIL
312405004 SH.1	2	SED–1 FRAMING DETAIL
312405004 SH.2	2	SED–1 FRAMING DETAIL
312405005 SH.1	2	SED–2 FRAMING DETAIL
312405005 SH.2	2	SED–2 FRAMING DETAIL
312405006	2	SEA–DEF FRAMING DETAIL
312405007	2	SEM–DEF FRAMING DETAIL
312405008	2	FOUNDATION DETAIL
312405009	2	GUYING DETAILS
312405010 SH.1	2	GROUNDING DETAILS
312405010 SH.2	2	GROUNDING DETAILS
312405011	2	OPGW DETAILS
312405012	2	MISCELLANEOUS DETAILS
312443801 SH.1	2	R.O.W. CROSS–SECTION
312443801 SH.2	2	R.O.W. CROSS–SECTION

CONTRACT SERVICES

DWG REV	EPN/DESCRIPTION	CONT/PE#	DATE	DRN	CHKD	APPR
2	AS BUILT WO# T1318A1	–	12/19/17	JJD	GEL	GEL
1	ISSUED FOR PROJECT RECORD	–	12/15/17	JJD	BAF	GEL
0.1	RE–ISSUED FOR CONSTRUCTION	GEL/15003	5/5/17	JJD	BAF	GEL
0	ISSUED FOR CONSTRUCTION	GEL/15003	9/23/16	JJD	BAF	GEL

EVERSOURCE ENERGY

LINE 3124 345kV TRANSMISSION
DRAWING INDEX

SHEET 2

T 2
DRAWN KLB/TRC
ENGINEER GEL/TRC
CHECKED CRP/TRC
APPROVED GEL/TRC
DATE 02/05/16

SCALE N.T.S.
FILE: S3124–T0001 SH.2.DWG
IMAGE:
DRAWING NO. S3124–T0001

ES VER: 11/2015
12/19/2017 3:36 PM – jdoody – C:\pwworkingemp\pw1\jdoody\d1045458\S3124-T0001 SH.2.dwg – SH02

EVERSOURCE

LINE 3124 345 kV TRANSMISSION

STRUCTURE OUTLINE

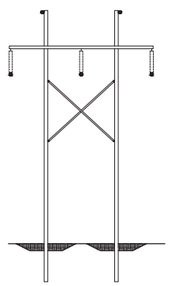

SEA–HF
STEEL POLE TANGENT
DWG. 312405001

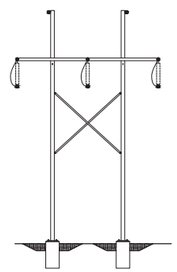

SEA–DEF
STEEL POLE
DEAD END (ON FOUNDATION)
DWG. 312405006

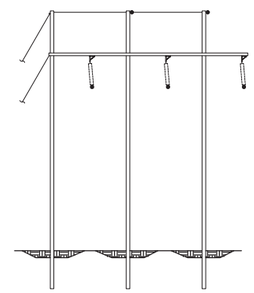

SEB–1
STEEL POLE RUNNING
ANGLE 3°–20°
DWG. 312405002

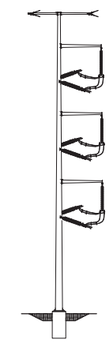

SEM–DEF
STEEL MONOPOLE
DEAD END ANGLE (ON FOUNDATION)
DWG. 312405007

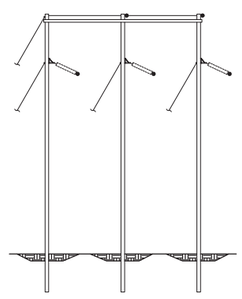

SEC–1
STEEL POLE RUNNING
ANGLE 20°–45°
DWG. 312405003

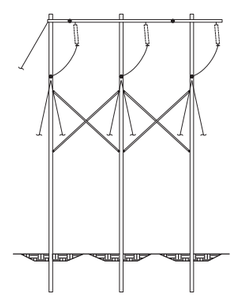

SED–1
STEEL POLE
DEAD END ANGLE (0°–15°)
DWG. 312405004

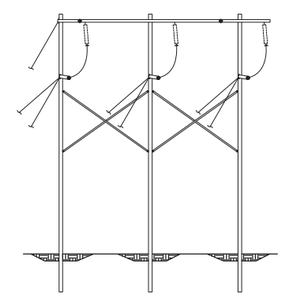

SED–2
STEEL POLE
DEAD END ANGLE (15°–90°)
DWG. 312405005

CONTRACT SERVICES

REV	DESCRIPTION	ENG/PE#	DATE	DRN	CHKD	APPR
2	AS BUILT WO# T1318A1	–	12/19/17	JJD	GEL	GEL
1	ISSUED FOR PROJECT RECORD	–	12/15/17	JJD	BAF	GEL
0	ISSUED FOR CONSTRUCTION	GEL/15003	9/23/16	JJD	BAF	GEL
DWG REV	EPN/DESCRIPTION	CONT/PE#	DATE	DRN	CHKD	APPR

EVERSOURCE ENERGY

LINE 3124 345kV TRANSMISSION
STRUCTURE OUTLINE

SHEET 3

T	2
DRAWN	KLB/TRC
ENGINEER	GEL/TRC
CHECKED	CRP/TRC
APPROVED	GEL/TRC
DATE	02/05/16
SCALE	N.T.S.
FILE: S3124–T0001 SH.3.DWG	
IMAGE:	
DRAWING NO.	S3124–T0001

ES VER: 11/2015
12/15/2017 10:40 AM – jdoody – C:\pwworkingemp\gw1\jdoody\d1045458\S3124-T0001 SH.3.dwg – SH04

EVERSOURCE

LINE 3124 345 kV TRANSMISSION

PHASING DIAGRAM

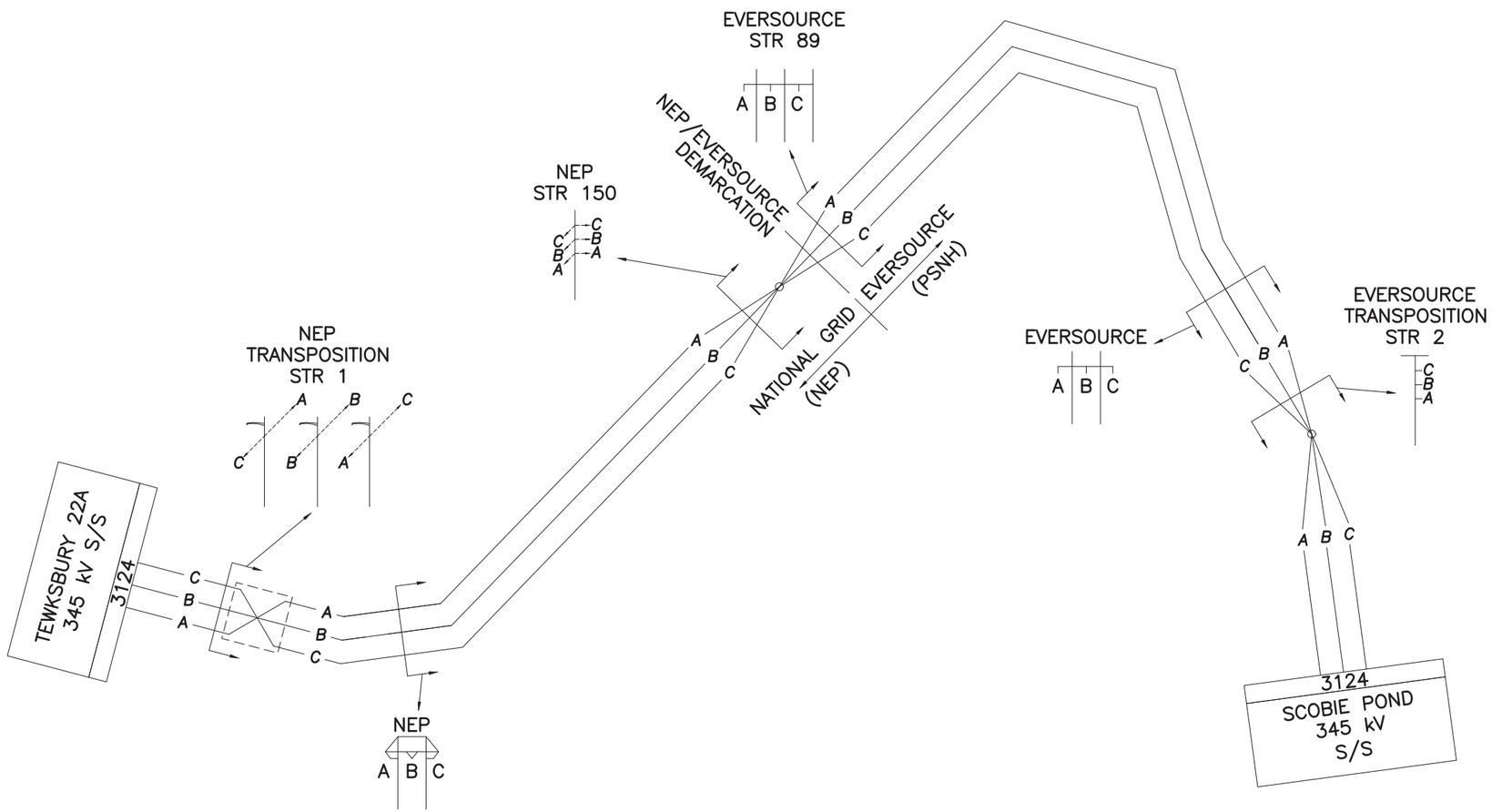

NOTES

1. NEP/EVERSOURCE DEMARCATION IS LOCATED AT THE EVERSOURCE STRUCTURE 89 VANG ATTACHMENT FOR THE SPAN BETWEEN EVERSOURCE STRUCTURE 89 AND NEP STRUCTURE 150. EVERSOURCE OWNS THE STRUCTURE, JUMPER LOOPS AND OPGW SPLICE ENCLOSURE. NEP OWNS THE SPAN CONDUCTOR, OPGW AND HARDWARE LEADING UP TO THE VANG ATTACHMENT.

CONTRACT SERVICES

REV	DESCRIPTION	ENG/PE#	DATE	DRN	CHKD	APPR
2	AS BUILT WO# T1318A1	–	12/19/17	JJD	GEL	GEL
1	ISSUED FOR PROJECT RECORD	–	12/15/17	JJD	BAF	GEL
0	ISSUED FOR CONSTRUCTION	GEL/15003	9/23/16	JJD	BAF	GEL
DWG REV	CPN/DESCRIPTION	CONT/PE#	DATE	DRN	CHKD	APPR

EVERSOURCE ENERGY

LINE 3124 345kV TRANSMISSION
PHASING DIAGRAM

SHEET 4

T	2
DRAWN	KLB/TRC
ENGINEER	GEL/TRC
CHECKED	CRP/TRC
APPROVED	GEL/TRC
DATE	02/05/16
SCALE	
FILE: S3124-T0001 SH.4.DWG	
IMAGE:	
DRAWING NO.	S3124-T0001

ES VER: 11/2015
12/19/2017 3:39 PM – jdoody – C:\pwworkingemp\pw1\jdoody\d1045458\S3124-T0001 SH.4.dwg – SH04

EVERSOURCE

LINE 3124 345 kV TRANSMISSION

LEGEND AND NOTES

PROFILE LEGEND

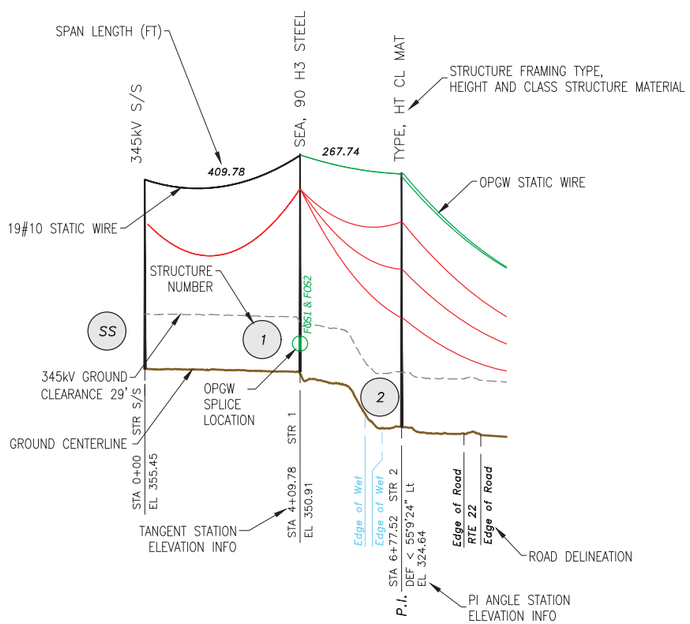

PLAN LEGEND

- #1 MAIN T–LINE STRUCTURE
- #1 MAIN T–LINE STRUCTURE IN WETLAND
- #1 EXISTING T–LINE STRUCTURE
- ROW LIMITS
- PROPERTY LINE
- 3124 LINE 345kV — MAIN TRANSMISSION LINE
- aaaa LINE nnnkV — OTHER TRANSMISSION LINE
- FENCE
- STONE WALL
- MAJOR ROAD — PAVED ROADS
- MAJOR ROAD — DIRT ROADS
- TRAILS
- P.I. STA nnn+nn.nn STR nnnn / DEF <nn°nn'nn" LT/RT — PLAN VIEW PI LABEL
- WETLAND
- RIVER NAME — RIVER/WATER
- BUILDING
- NATURAL GAS EASEMENT — GAS EASEMENT
- SEWER EASEMENT — SEWER EASEMENT
- EVERSOURCE FEE PROPERTY
- TOWN LINE — TOWN LINE

NOTES

1. PHYSICAL FEATURES MAPPED FROM UPDATED LINE 326 PLAN AND PROFILES 2012
2. ENVIRONMENTAL DELINEATIONS CONDUCTED BY NORMANDEAU 2013
3. ADDITIONAL ENVIRONMENTAL DELINEATIONS CONDUCTED BY VHB 2014
4. LIDAR SURVEY CONDUCTED BY GEODIGITAL 2011
5. COORDINATES BASED ON NAD83 NEW HAMPSHIRE U.S. FOOT
6. PROPERTY LINES BY CORNERSTONE 2015

WIRE DATA

WIRE	# OF CABLES	TYPE	DIA. (IN.)	WEIGHT/ 1000 FT	CABLE STRENGTH (LBS.)
NEW OPGW	2	AFL DNO–11183 S1–87/67/650	0.650	480	17,704
NEW STATIC WIRE	2	19#10 ALUMOWELD	0.509	449	27,190
NEW CONDUCTOR	6	1590 KCM 54/19 ACSR	1.545	2042	54,500

CONTRACT SERVICES

REV	DESCRIPTION	ENG/PE#	DATE	DRN	CHKD	APPR
2	AS BUILT WO# T1318A1	–	12/19/17	JJD	GEL	GEL
1	ISSUED FOR PROJECT RECORD	–	12/15/17	JJD	BAF	GEL
0	ISSUED FOR CONSTRUCTION	GEL/15003	9/23/16	JJD	BAF	GEL
DWG REV	EPN/DESCRIPTION	CONT/PE#	DATE	DRN	CHKD	APPR

EVERSOURCE ENERGY

LINE 3124 345kV TRANSMISSION
LEGEND AND NOTES

SHEET 5

T 2
DRAWN TSW/TRC
ENGINEER GEL/TRC
CHECKED JJD/TRC
APPROVED GEL/TRC
DATE 02/05/16

SCALE
FILE: S3124-T0001 SH.5.DWG
IMAGE:
DRAWING NO. S3124–T0001

ES VER: 11/2015
12/19/2017 3:40 PM – jdoody – C:\pwworkingemp\pw1\jdoody\d1045458\S3124-T0001 SH.5.dwg – SH05

ES VER: 11/2015

EVERSOURCE

LINE 3124 345 kV TRANSMISSION

KEY SHEET

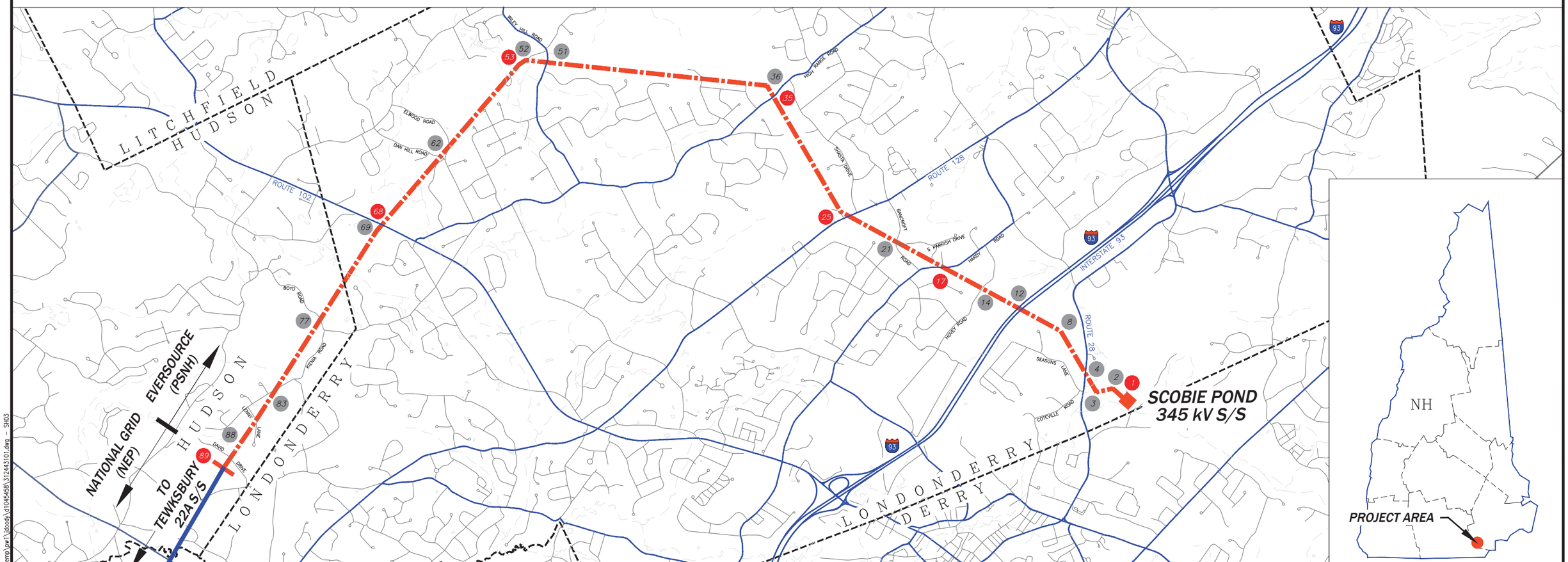

LEGEND:

- TRANSMISSION LINE
- 2 STRUCTURE NUMBER
- 1 OPGW SPLICE LOCATIONS

2000' 1000' 0' 2000' 4000' 6000'

GRAPHIC SCALE

N

CONTRACT SERVICES						
REV	DESCRIPTION	ENG/PE#	DATE	DRN	CHKD	APPR
2	AS BUILT WO# T1318A1	–	12/19/17	JJD	GEL	GEL
1	ISSUED FOR PROJECT RECORD	–	12/15/17	JJD	BAF	GEL
0	ISSUED FOR CONSTRUCTION	GEL/15003	9/23/16	JJD	BAF	GEL
DWG REV	EPN/DESCRIPTION	CONT/PE#	DATE	DRN	CHKD	APPR

EVERSOURCE ENERGY

LINE 3124 345 kV TRANSMISSION
KEY SHEET

T	2
DRAWN	KLB/TRC
ENGINEER	GEL/TRC
CHECKED	CRP/TRC
APPROVED	GEL/TRC
DATE	02/05/16

SCALE: AS NOTED
FILE: 312443101.DWG
IMAGE:
DRAWING NO. 312443101

12/19/2017 4:11 PM – jdoody – C:\pwworking\emp\pw1\jdoody\d1045458\312443101.dwg – SH03

ES VER: 11/2015

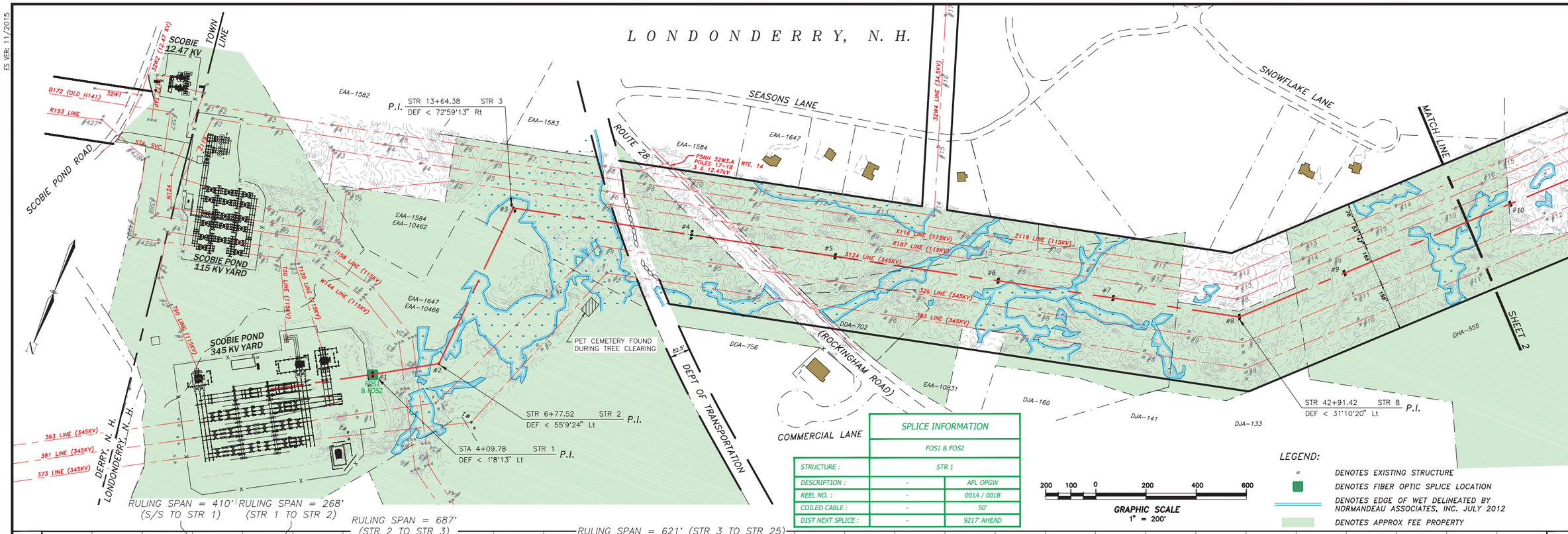

SPLICE INFORMATION		
FOS1 & FOS2		
STRUCTURE :	STR 1	
DESCRIPTION :	-	AFL OPGW
REEL NO. :	-	001A / 001B
COILED CABLE :	-	50'
DIST NEXT SPLICE :	-	9217' AHEAD

GRAPHIC SCALE 1" = 200'

LEGEND:
- DENOTES EXISTING STRUCTURE
- DENOTES FIBER OPTIC SPLICE LOCATION
- DENOTES EDGE OF WET DELINEATED BY NORMANDEAU ASSOCIATES, INC. JULY 2012
- DENOTES APPROX FEE PROPERTY

NO.	REVISION	DATE	DRWN	CHKD	APPRV.
2	AS BUILT W/# T1318A1	12/19/17	JJD	GEL	GEL
1	ISSUED FOR PROJECT RECORD	12/15/17	JJD	BAF	GEL
0	ISSUED FOR CONSTRUCTION	10/10/16	JJD	GEL	GEL

FIBER OPTIC CABLE: AFL 0.650" OPGW @ 0ft
CONDUCTOR: (2) 1590 ACSR 54/19 @ 285ft
GROUND OR NEUTRAL: 1#10 ALUMOWELD SHIELD WIRE @ 0ft

EVERSOURCE ENERGY

T 2

SCOBIE POND S/S TO NEP/NGRID 345kV TRANSMISSION LINE
MILE SHEET

DATE:02/05/16
SCALE: H 1=200' V 1=40'

DES: GEL CHK:JJD
DRW: TSW APR: GEL
TOWN: LONDONDERRY
TRANSMISSION LINE: 3124
MILE NO: 1
DISCIPLINE/SHT NO.
SHEET 1 OF 10
312443001

12/19/2017 3:29 PM – jbody – C:\pwworking\emp\pw1\jbody\d1045458\312443001.dwg – Mile 1

ES VER: 11/2015

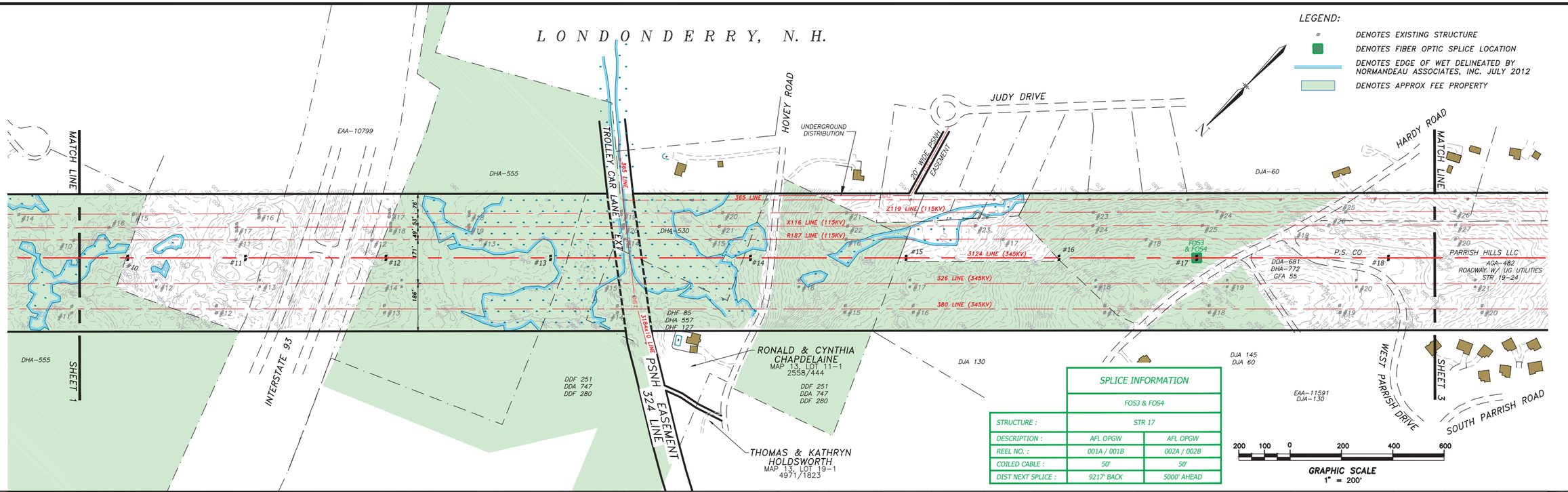

SPLICE INFORMATION		
	FOS3 & FOS4	
STRUCTURE :	STR 17	
DESCRIPTION :	AFL OPGW	AFL OPGW
REEL NO. :	001A / 001B	002A / 002B
COILED CABLE :	50'	50'
DIST NEXT SPLICE :	9217' BACK	5000' AHEAD

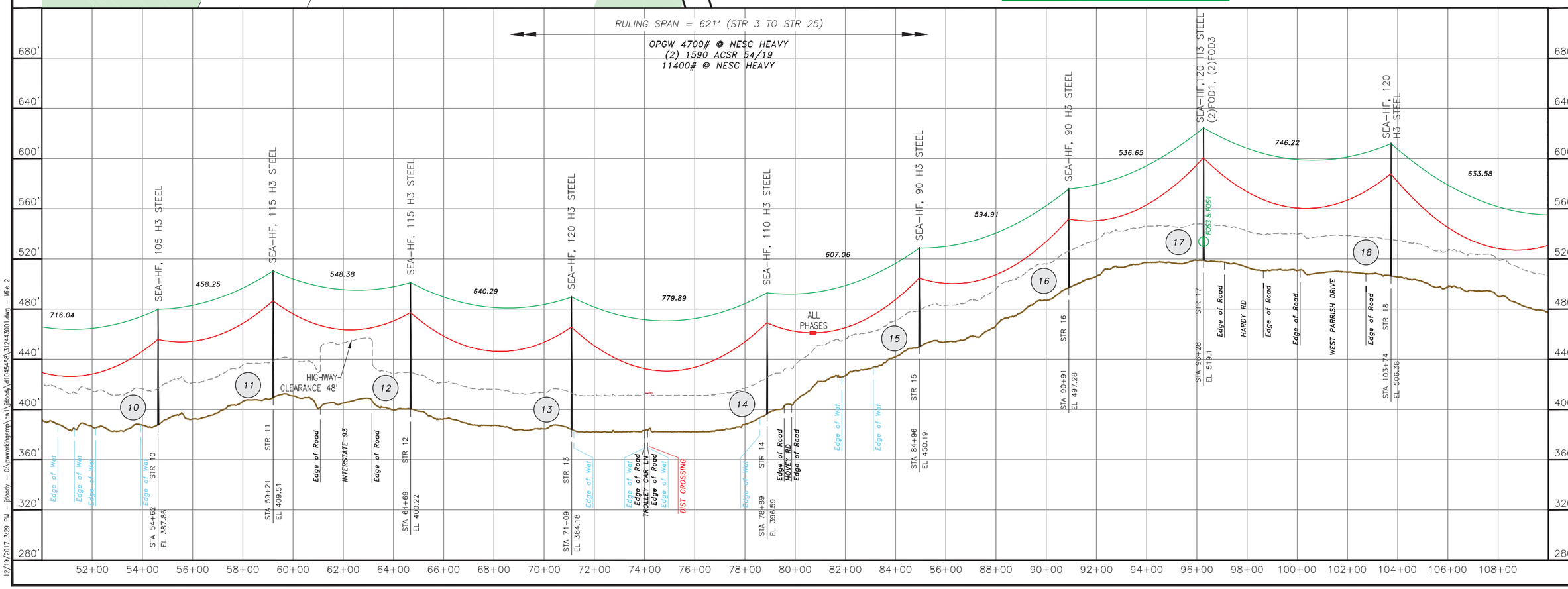

NO.	REVISION	DATE	DRWN	CHKD	APPRV.
2	AS BUILT WO# T131BA1	12/19/17	JJD	BAF	GEL
1	ISSUED FOR PROJECT RECORD	12/15/17	JJD	BAF	GEL
0	ISSUED FOR CONSTRUCTION	12/12/16	BAF	JJD	GEL

	FIBER OPTIC CABLE	AFL 0.650" OPGW @ CT
	CONDUCTOR	(2) 1590 ACSR 54/19 @ 285'T
	GROUND OR NEUTRAL	

EVERSOURCE ENERGY

T 2

SCOBIE POND S/S TO NEP/NGRID
345kV TRANSMISSION LINE
MILE SHEET

DATE:02/05/16

SCALE: H: 1=200' V: 1=40'

DES: GEL CHK:JJD
DRW: TSW APR: GEL
TOWN: LONDONDERRY
TRANSMISSION LINE: 3124
MILE NO: 2
DISCIPLINE/SHT NO.
SHEET 2 OF 10
312443001

12/19/2017 3:29 PM – jjdoody – C:\pwworking\eng\pw1\jdoody\d1045458\312443001.dwg – Mile 2

ES VER: 11/2015

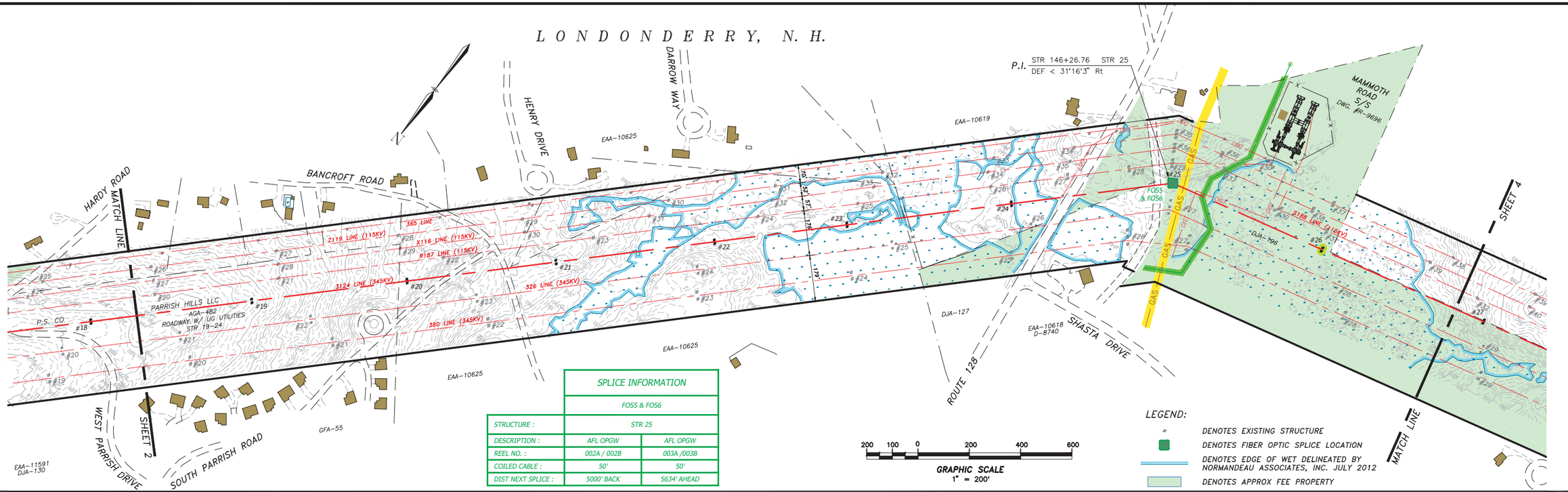

SPLICE INFORMATION		
	FOS5 & FOS6	
STRUCTURE :	STR 25	
DESCRIPTION :	AFL OPGW	AFL OPGW
REEL NO. :	002A / 002B	003A /003B
COILED CABLE :	50'	50'
DIST NEXT SPLICE :	5000' BACK	5634' AHEAD

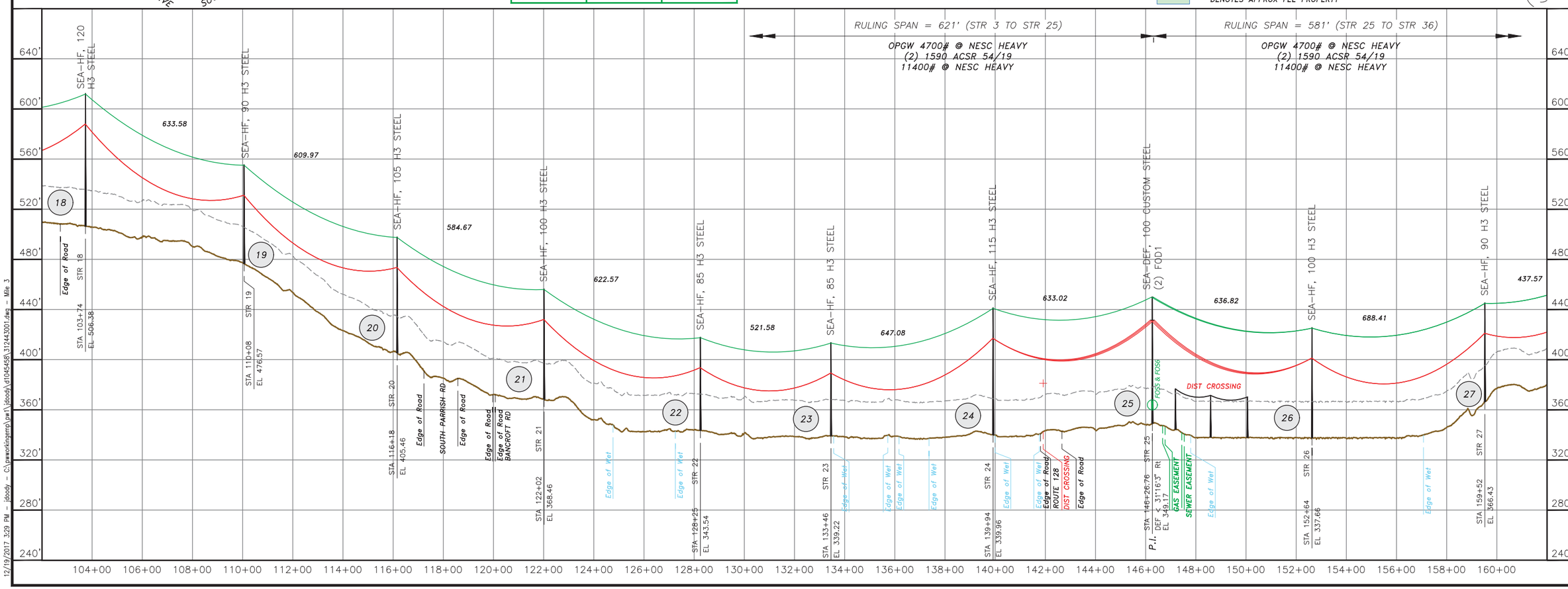

NO.	REVISION	DATE	DRWN	CHKD	APPRV.
2	AS BUILT WO# T131BA1	12/19/17	JJD	GEL	GEL
1	ISSUED FOR PROJECT RECORD	12/15/17	JJD	BAF	GEL
0	ISSUED FOR CONSTRUCTION	12/7/16	JJD	GEL	GEL

	FIBER OPTIC CABLE	AFL 0.650" OPGW @ CT
	CONDUCTOR	(2) 1590 ACSR 54/19 @ 285T
	GROUND OR NEUTRAL	

EVERSOURCE ENERGY

T 2

SCOBIE POND S/S TO NEP/NGRID
345kV TRANSMISSION LINE
MILE SHEET

DATE: 02/08/16

SCALE: H: 1"=200', V: 1"=40'

DES: GEL CHK: JJD
DRW: TSW APR: GEL

TOWN: LONDONDERRY

TRANSMISSION LINE: 3124

MILE NO: 3

DISCIPLINE/SHT NO.

SHEET 3 OF 10

312443001

12/19/2017 3:29 PM - jdoody - C:\pwworking\emb\pw1\jdoody\d1045458\312443001.dwg - Mile 3

ES VER: 11/2015

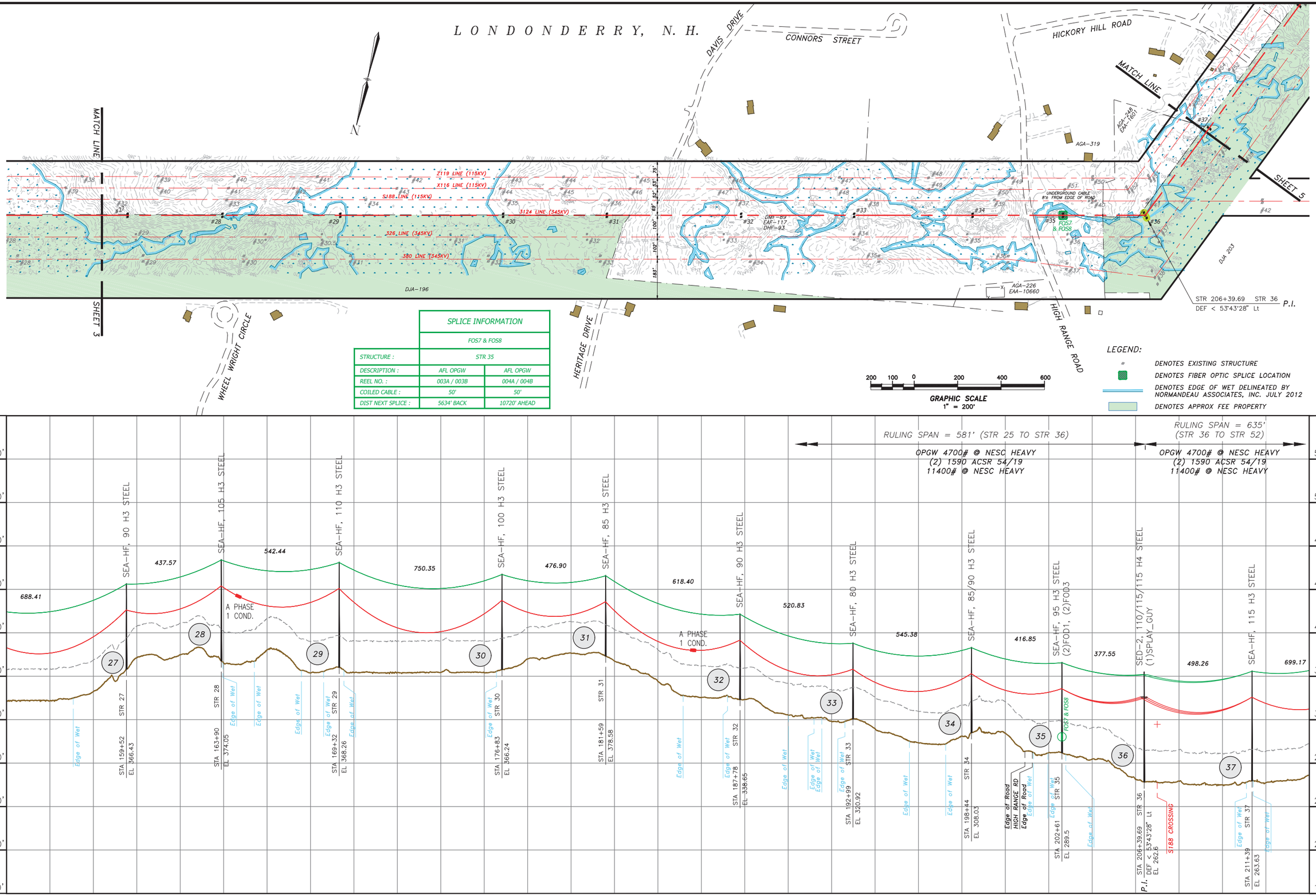

SPLICE INFORMATION		
	FOS7 & FOS8	
STRUCTURE :	STR 35	
DESCRIPTION :	AFL OPGW	AFL OPGW
REEL NO. :	003A / 003B	004A / 004B
COILED CABLE :	50'	50'
DIST NEXT SPLICE :	5634' BACK	10720' AHEAD

NO.	REVISION	DATE	DRWN	CHKD	APPRV.
2	AS BUILT W/# T1319A1	12/19/17	JJD	BAF	GEL
1	ISSUED FOR PROJECT RECORD	12/15/17	JJD	BAF	GEL
0	ISSUED FOR CONSTRUCTION	8/4/16	JJD	BAF	GEL

FIBER OPTIC CABLE: AFL 0.650 OPGW @ OFF
CONDUCTOR: (2) 1590 ACSR 54/19 @ 285FT
GROUND OR NEUTRAL:

EVERSOURCE ENERGY

T 2

SCOBIE POND S/S TO NEP/NGRID
345kV TRANSMISSION LINE
MILE SHEET

DATE: 02/09/16
SCALE: H 1=200', V 1=40'

DES: GEL CHKD: JD
DRW: TSW APR: GEL
TOWN: LONDONDERRY
TRANSMISSION LINE: 3124
MILE NO: 4
DISCIPLINE/SHT NO.
SHEET 4 OF 10
312443001

12/19/2017 3:29 PM – jdoody – G:\pwworkingemp\pa1\jdoody\d1045458\312443001.dwg – Mile 4

ES VER: 11/2015

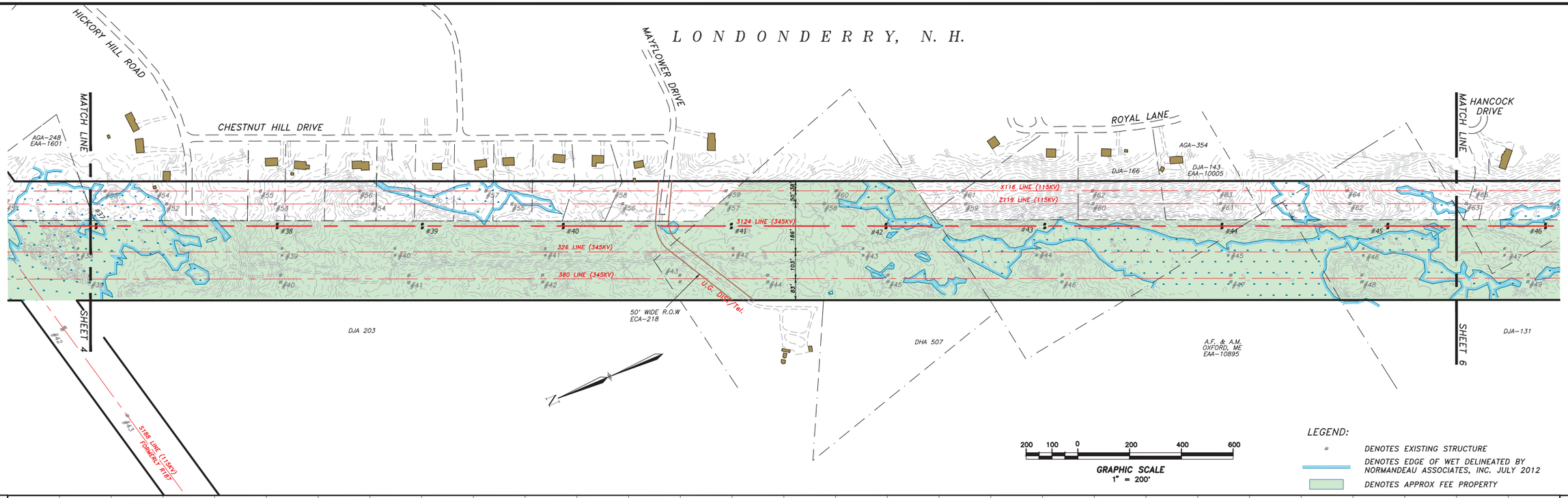

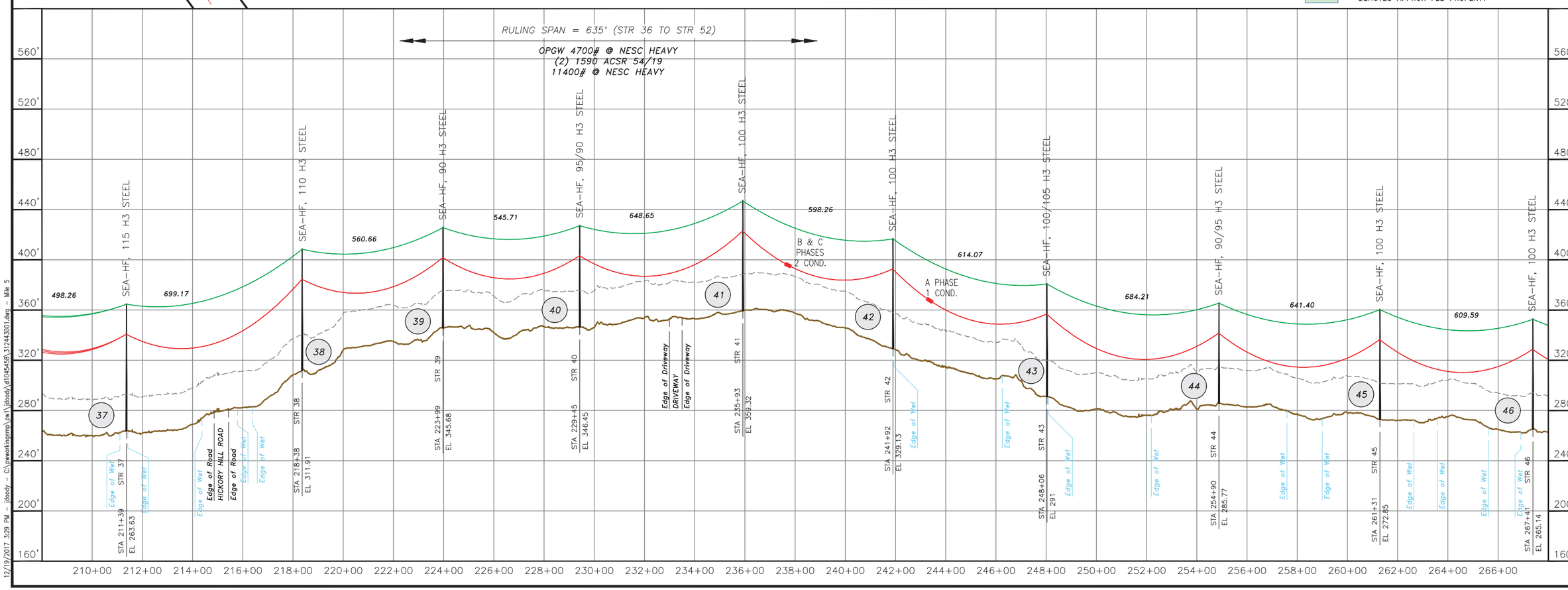

NO.	REVISION	DATE	DRWN	CHKD	APPRV.
2	AS BUILT W/# T131BA1	12/19/17	JJD	BAF	GEL
1	ISSUED FOR PROJECT RECORD	12/15/17	JJD	BAF	GEL
0	ISSUED FOR CONSTRUCTION	9/7/16	JJD	BAF	GEL

	FIBER OPTIC CABLE	AFL 0.650" OPGW @ CFT
	CONDUCTOR	(2X) 1590 ACSR 54/19 @ 285°F
	GROUND OR NEUTRAL	

EVERSOURCE ENERGY

T 2

SCOBIE POND S/S TO NEP/NGRID 345kV TRANSMISSION LINE
MILE SHEET

DATE: 02/09/16

SCALE: H: 1"=200', V: 1"=40'

DES: GEL CHK: JJD
DRW: TSW APR: GEL

TOWN: LONDONDERRY
TRANSMISSION LINE: 3124
MILE NO: 5
DISCIPLINE/SHT NO.
SHEET 5 OF 10
312443001

12/19/2017 3:29 PM - jdoody - C:\pwworking\eme\pw1\jdoody\d1045458\312443001.dwg - Mile 5

ES VER: 11/2015

L O N D O N D E R R Y, N. H.

SPLICE INFORMATION		
	FOS9 & FOS10	
STRUCTURE :	STR 53	
DESCRIPTION :	AFL OPGW	AFL OPGW
REEL NO. :	004A / 004B	005A / 005B
COILED CABLE :	50'	50'
DIST NEXT SPLICE :	10720' BACK	9045' AHEAD

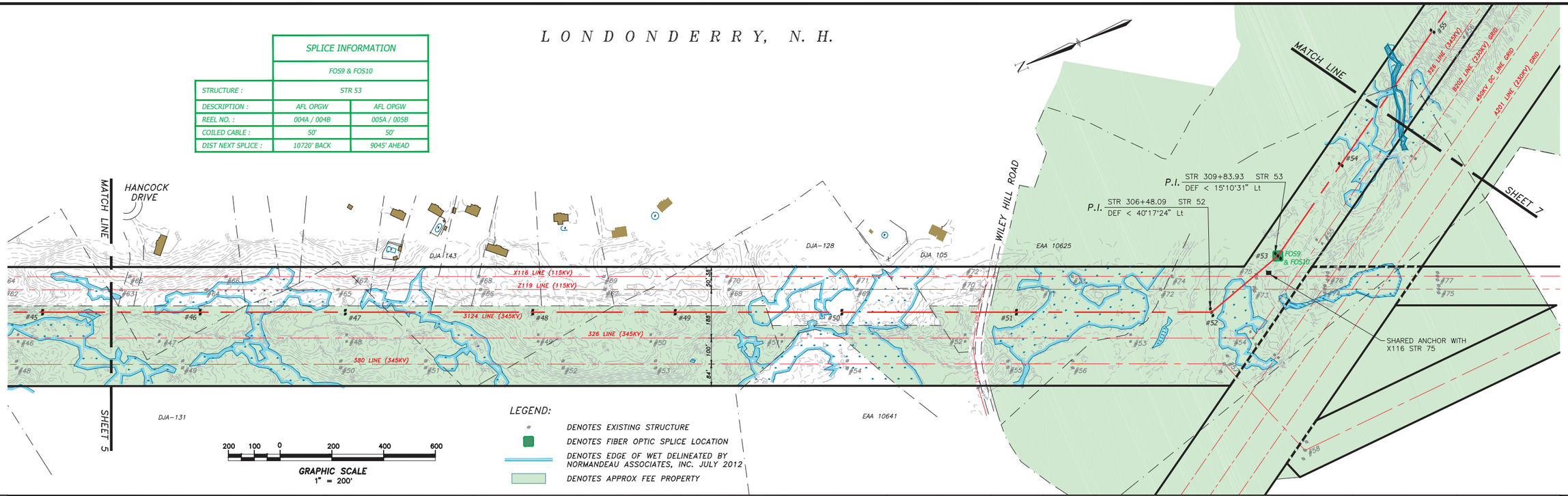

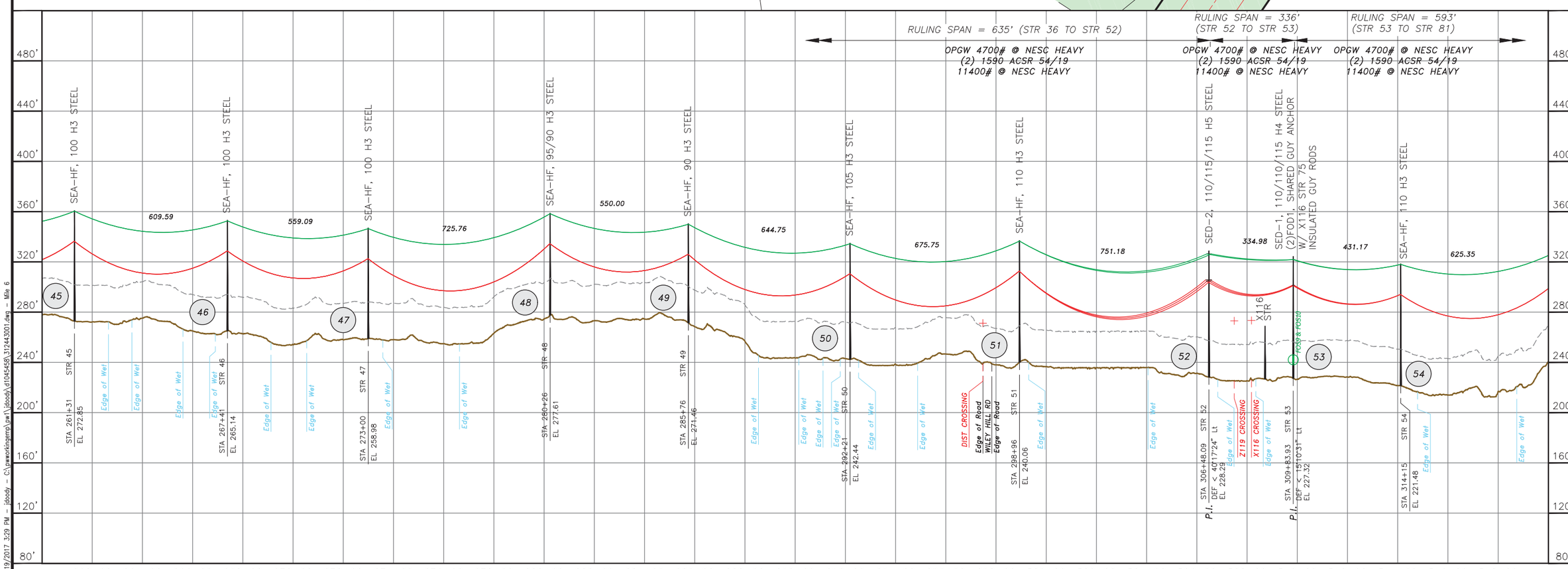

NO.	REVISION	DATE	DRWN	CHKD	APPRV.
2	AS BUILT WO# T131BA1	12/19/17	JJD	GEL	GEL
1	ISSUED FOR PROJECT RECORD	12/15/17	JJD	BAF	GEL
0	ISSUED FOR CONSTRUCTION	04/04/16	JJD	JJD	GEL

	FIBER OPTIC CABLE	AFL 0.650" OPGW @ CF
	CONDUCTOR	(2) 1590 ACSR 54/19 @ 285ft
	GUY WIRE	
	GROUND OR NEUTRAL	

EVERSOURCE ENERGY

T 2

SCOBIE POND S/S TO NEP/NGRID 345kV TRANSMISSION LINE
MILE SHEET

DATE:02/05/16
SCALE: H 1=200' V 1=40'

DES: GEL CHK:JJD
DRW: TSW APR: GEL

TOWN: LONDONDERRY

TRANSMISSION LINE: 3124

MILE NO: 6

DISCIPLINE/SHT NO.

SHEET 6 OF 10

312443001

12/19/2017 3:29 PM – jboody – C:\pwworking\eng\pw1\jboody\d1045458\312443001.dwg – Mile 6

ES VER: 11/2015

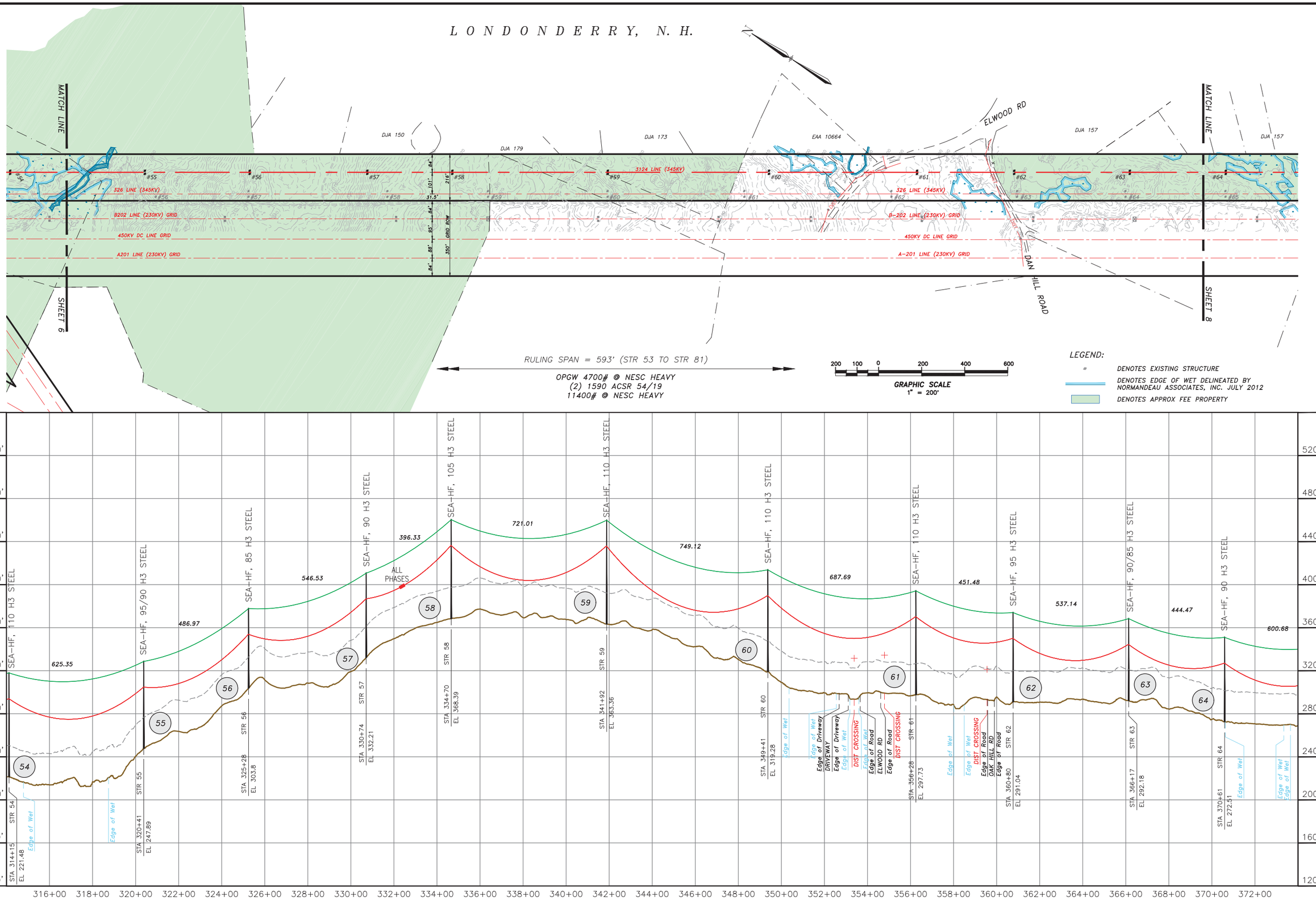

NO.	REVISION	DATE	DRWN	CHKD	APPRV.
2	AS BUILT W/# T131BA1	12/19/17	JJD	GEL	GEL
1	ISSUED FOR PROJECT RECORD	12/15/17	JJD	BAF	GEL
0	ISSUED FOR CONSTRUCTION	04/20/16	JJD	BAF	GEL

	FIBER OPTIC CABLE	AFL 0.650" OPGW @ CT
	CONDUCTOR	(2) 1590 ACSR 54/19 @ 285°F
	GROUND OR NEUTRAL	

EVERSOURCE ENERGY

T 2

SCOBIE POND S/S TO NEP/NGRID
345kV TRANSMISSION LINE
MILE SHEET

DATE: 02/05/16

SCALE: H: 1=200', V: 1=40'

DES: GEL CHK: JJD
DRW: TSW APR: GEL

TOWN: LONDONDERRY

TRANSMISSION LINE: 3124

MILE NO: 7

DISCIPLINE/SHT NO.

SHEET 7 OF 10

312443001

12/19/2017 3:29 PM – jdoody – C:\pwworking\emp\(w1)\jdoody\d1045458\312443001.dwg – Mile 7

ES VER: 11/2015

LONDONDERRY, N. H.

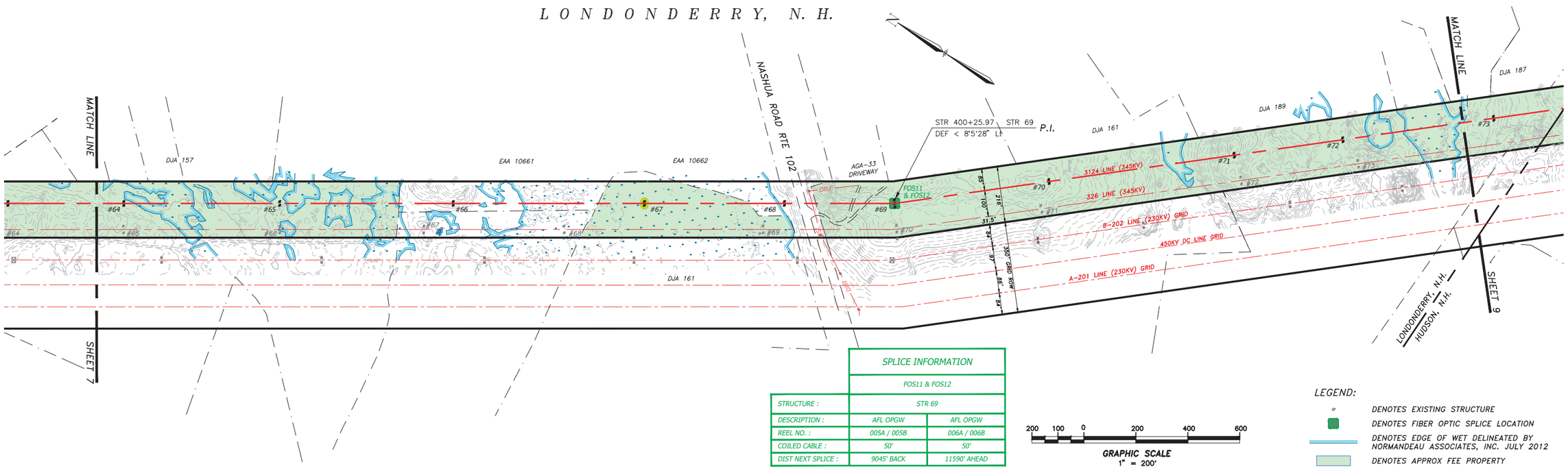

SPLICE INFORMATION		
	FOS11 & FOS12	
STRUCTURE :	STR 69	
DESCRIPTION :	AFL OPGW	AFL OPGW
REEL NO. :	005A / 005B	006A / 006B
COILED CABLE :	50'	50'
DIST NEXT SPLICE :	9045' BACK	11590' AHEAD

200 100 0 200 400 600

GRAPHIC SCALE
1" = 200'

LEGEND:

- DENOTES EXISTING STRUCTURE
- DENOTES FIBER OPTIC SPLICE LOCATION
- DENOTES EDGE OF WET DELINEATED BY NORMANDEAU ASSOCIATES, INC. JULY 2012
- DENOTES APPROX FEE PROPERTY

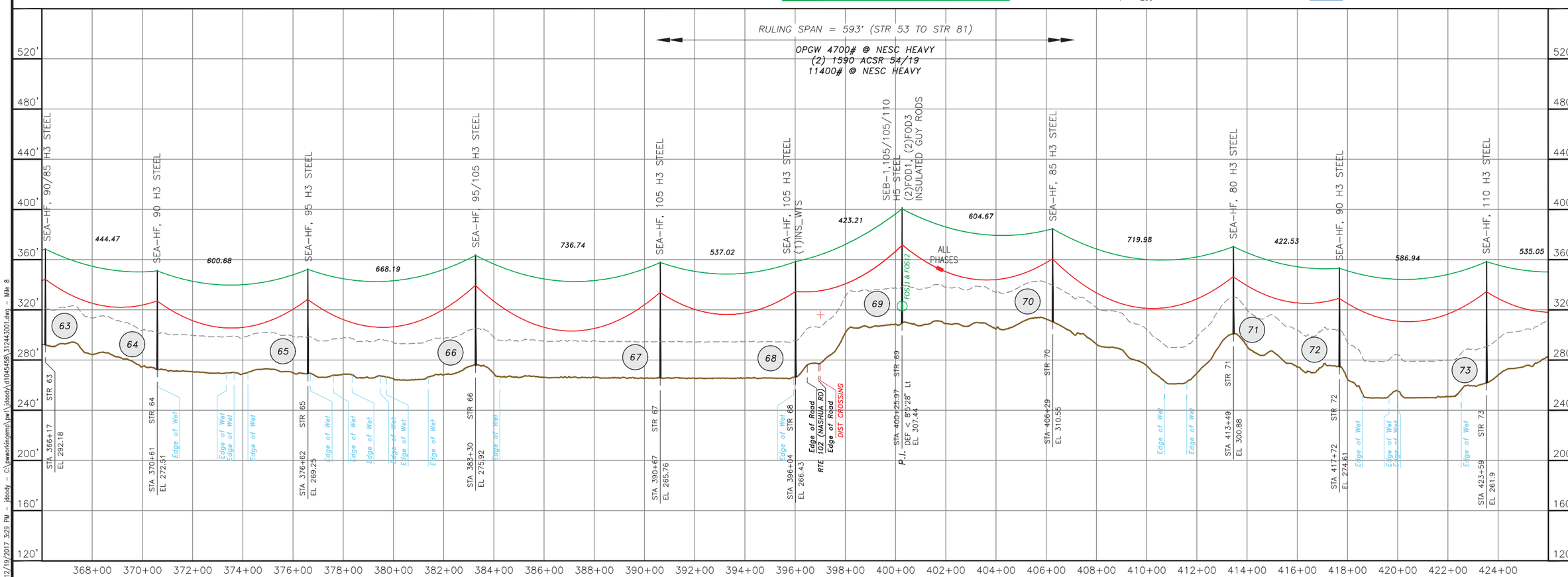

NO.	REVISION	DATE	DRWN	CHKD	APPRV.
2	AS BUILT W/# T1318A1	12/19/17	JJD	BAF	GEL
1	ISSUED FOR PROJECT RECORD	12/15/17	JJD	BAF	GEL
0	ISSUED FOR CONSTRUCTION	9/20/16	JJD	BAF	GEL

FIBER OPTIC CABLE: AFL 0.650" OPGW @ CFT
CONDUCTOR: (2) 1590 ACSR 54/19 @ 285FT
GROUND OR NEUTRAL:

EVERSOURCE ENERGY

T 2

SCOBIE POND S/S TO NEP/NGRID
345kV TRANSMISSION LINE
MILE SHEET

DATE: 02/09/16

SCALE: H: 1"=200', V: 1"=40'

DES: GEL CHKD: JJD
DRW: TSW APR: GEL

TOWN: LONDONDERRY
TRANSMISSION LINE: 3124
MILE NO: 8
DISCIPLINE/SHT NO.
SHEET 8 OF 10
312443001

12/19/2017 3:29 PM – jdoody – G:\pwworkingemp\pal\jdoody\d1045458\312443001.dwg – Mile 8

ES VER: 11/2015

HUDSON, N. H.

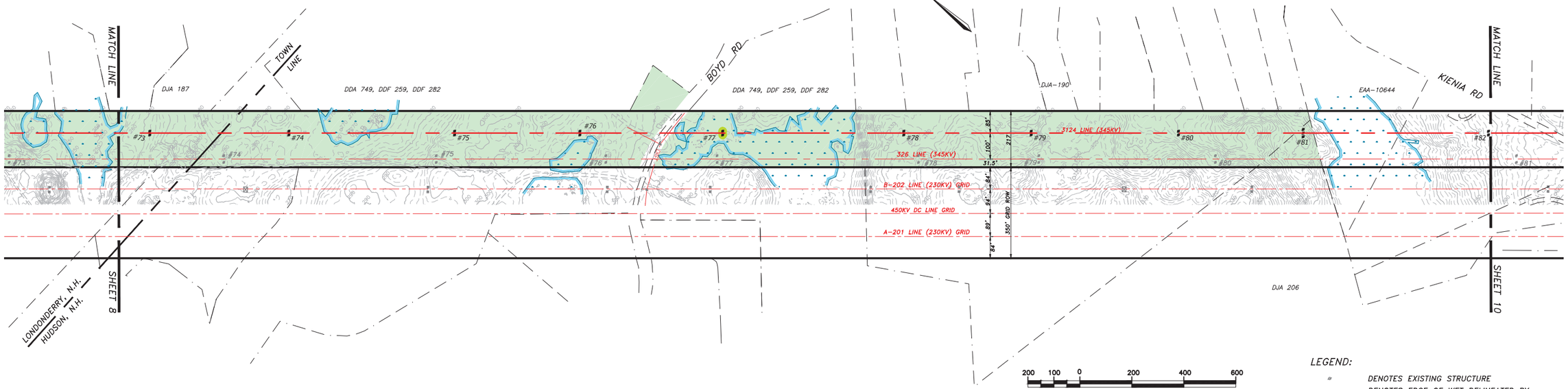

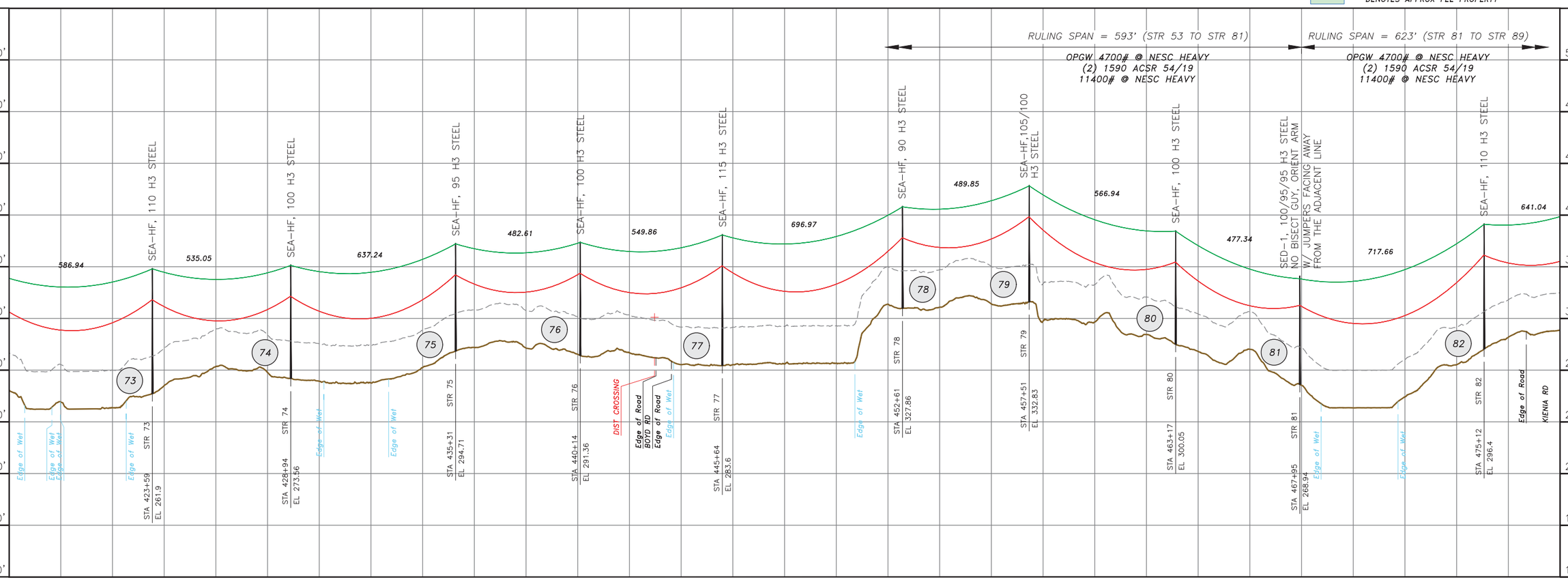

NO.	REVISION	DATE	DRWN	CHKD	APPRV.
2	AS BUILT W/# T131BA1	12/19/17	JJD	GEL	GEL
1	ISSUED FOR PROJECT RECORD	12/15/17	JJD	BAF	GEL
0	ISSUED FOR CONSTRUCTION	10/10/16	JJD	BAF	GEL

FIBER OPTIC CABLE: AFL 0.650" OPGW @ OT
CONDUCTOR: (2) 1590 ACSR 54/19 @ 285'T
GROUND OR NEUTRAL:

EVERSOURCE ENERGY

T 2

SCOBIE POND S/S TO NEP/NGRID
345kV TRANSMISSION LINE
MILE SHEET

DATE:02/05/16
SCALE: H 1=200' V 1=40'

DES: GEL CHK:JJD
DRW: TSW APR: GEL
TOWN: HUDSON
TRANSMISSION LINE: 3124
MILE NO: 9
DISCIPLINE/SHT NO.
SHEET 9 OF 10
312443001

12/19/2017 3:29 PM – jbooby – C:\pwworking\emp\pw1\jbooby\d1045458\312443001.dwg – Mile 9

ES VER: 11/2015

H U D S O N, N. H.

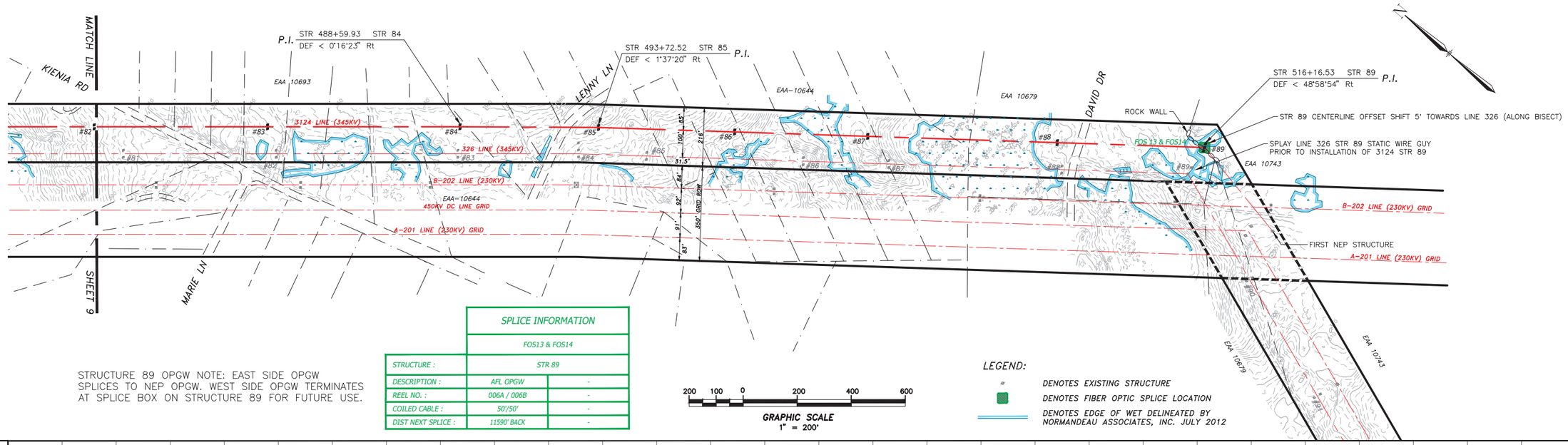

STRUCTURE 89 OPGW NOTE: EAST SIDE OPGW SPLICES TO NEP OPGW. WEST SIDE OPGW TERMINATES AT SPLICE BOX ON STRUCTURE 89 FOR FUTURE USE.

SPLICE INFORMATION		
	FOS13 & FOS14	
STRUCTURE :	STR 89	
DESCRIPTION :	AFL OPGW	-
REEL NO. :	006A / 006B	-
COILED CABLE :	50'/50'	-
DIST NEXT SPLICE :	11590' BACK	-

200 100 0 200 400 600

GRAPHIC SCALE
1" = 200'

LEGEND:

- DENOTES EXISTING STRUCTURE
- DENOTES FIBER OPTIC SPLICE LOCATION
- DENOTES EDGE OF WET DELINEATED BY NORMANDEAU ASSOCIATES, INC. JULY 2012

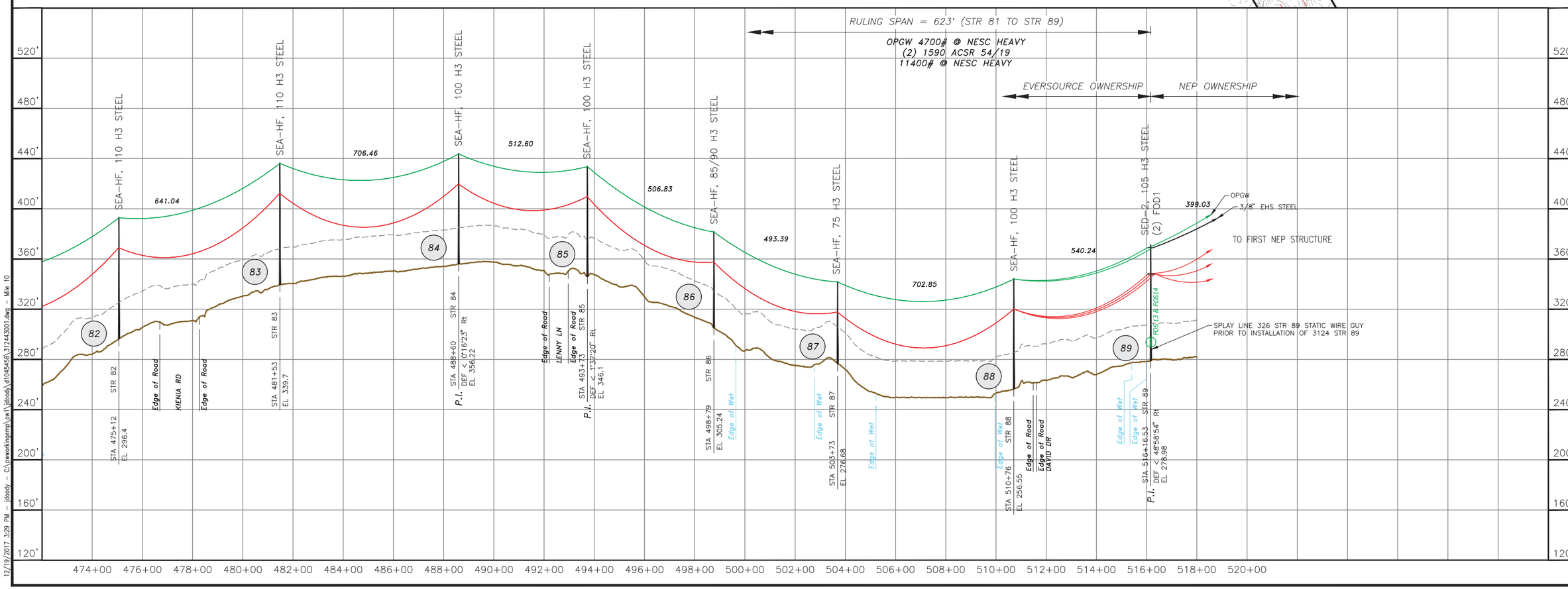

NO.	REVISION	DATE	DRWN	CHKD	APPRV.
2	AS BUILT WO# T1318A1	12/19/17	JJD	GEL	GEL
1	ISSUED FOR PROJECT RECORD	12/15/17	JJD	BAF	GEL
0.1	RE-ISSUED FOR CONSTRUCTION	5/2/17	JJD	BAF	GEL
0	ISSUED FOR CONSTRUCTION	8/24/16	JJD	BAF	82/1000

FIBER OPTIC CABLE	AFL 0.650" OPGW @ CFT
CONDUCTOR	(2) 1590 ACSR 54/19 @ 285FT
CONDUIT	
GROUND OR NEUTRAL	

EVERSOURCE ENERGY

T 2

SCOBIE POND S/S TO NEP/NGRID
345kV TRANSMISSION LINE
MILE SHEET

DATE: 02/05/16

SCALE: H 1=200', V 1=40'

DES: GEL CHK: JJD
DRW: TSW APR: GEL

TOWN: HUDSON

TRANSMISSION LINE: 3124

MILE NO: 10

DISCIPLINE/SHT NO.

SHEET 10 OF 10

312443001

12/19/2017 3:29 PM – jdoody – C:\pwworkingemp\pw1\jdoody\d1045458\312443001.dwg – Mile 10

ES VER: 11/2015

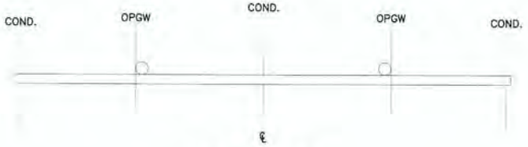

PLAN VIEW

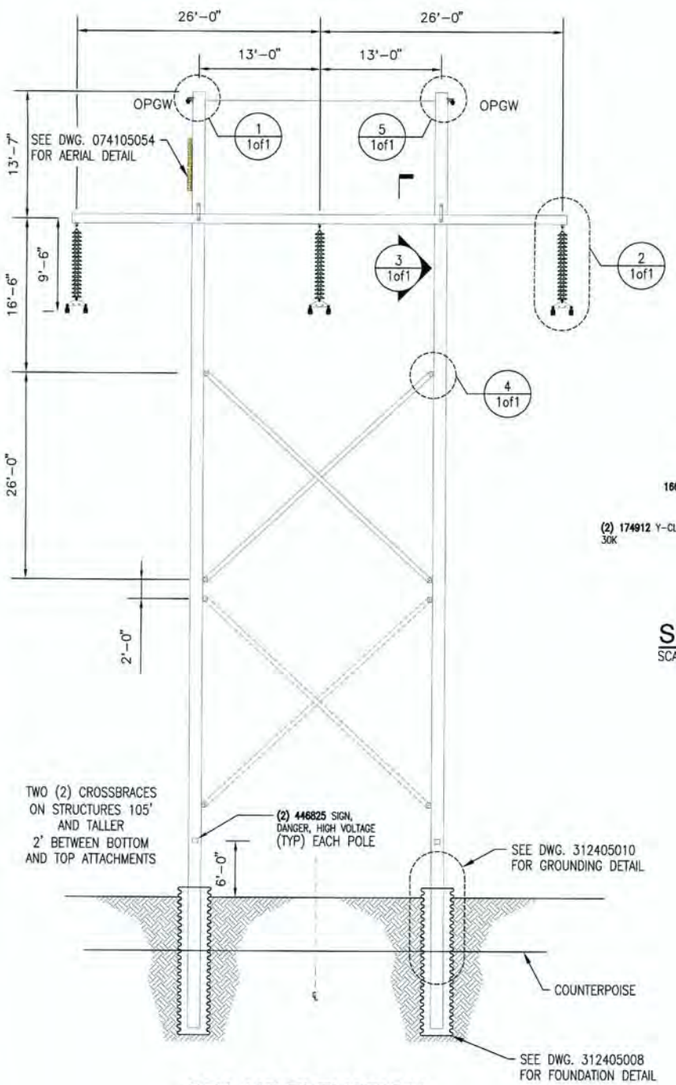

SEA-HF ELEVATION

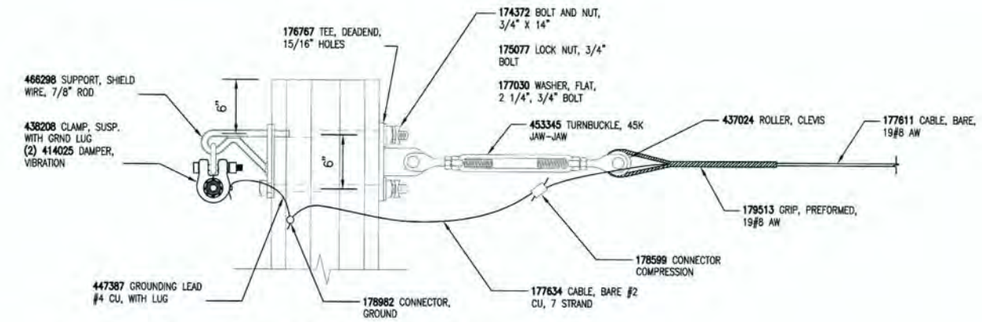

OPGW & BRIDLE ATTACHMENT DETAIL (1)

SCALE: NTS 1of1

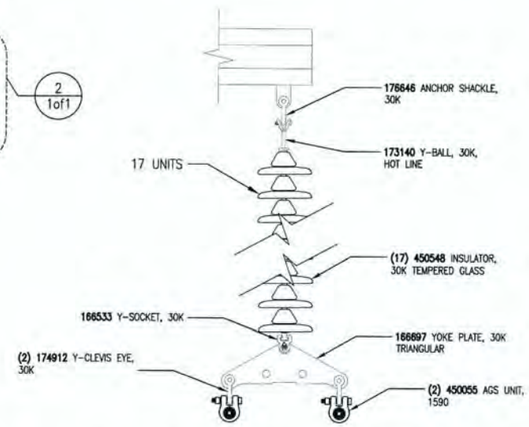

SUSPENSION INSULATOR DETAIL (2)

SCALE: NTS 1of1

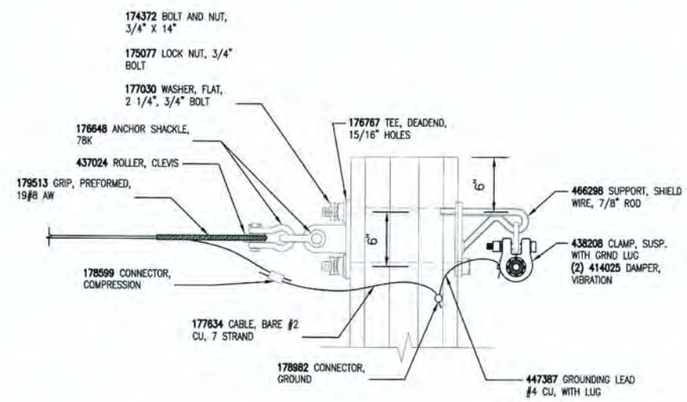

OPGW & BRIDLE ATTACHMENT DETAIL (5)

SCALE: NTS 1of1

MATERIAL LIST

STOCK CODE	DESCRIPTION	QTY (EA UNLESS NOTED)
OPGW ATTACHMENT		
438208	CLAMP, SUSP., AGS, OPGW, 0.633–0.666 DIA WITH GROUND LUG	2
414025	DAMPER, VIBRATION, SPIRAL, .564–.760", FOR FIBER	4
178982	CONNECTOR, GROUNDING, SERVIT POST, #2–2/0 STR. CU., (2–3/0 SOL.)	2
447387	GROUNDING LEAD, F/OPGW DE, 4', #4 CU, W/ LUG	2
174372	BOLT, MACHINE, 3/4" X 14" WITH NUT	2
175077	NUT, LOCK, MF, FOR 3/4" BOLT	2
466298	SUPPORT, SHIELD WIRE, THREADED ROD, 7/8 X 14 IN, 7 IN THREADED, INCLUDES WASHER, NUT AND LOCKNUT	2
GROUNDING		
178982	CONNECTOR, GROUNDING, SERVIT POST, #2–2/0 STR. CU., (2–3/0 SOL.)	4
446240	CONNECTOR, C–TAP, 3#8 CW TO 3#8 CW	8
177820	CABLE, BARE, COPPERWELD, 3#8	100 FT
137613	CONNECTOR, GROUNDING, 3#8 CWLD TO FLAT	4
CONDUCTOR ATTACHMENT		
450055	CLAMP, SUSP., AGS, 1590 ACSS 54/19	6
174912	Y–CLEVIS EYE, 30K	6
166697	PLATE, YOKE, DELTA, 30K	3
166533	CLEVIS, Y–SOCKET, 3/4 IN PIN, 30K, GALV. STEEL	3
450548	INSULATOR, GLASS, M&E RATED, 53–5, 10 IN., 30,000 LBS	51
173140	BALL, Y–CLEVIS, HOTLINE EXTENSION LINK, GALVANIZED STEEL, 30,000 LBS.	3
176646	SHACKLE, ANCHOR, 5/8 IN., BOLT/NUT/KEY, GALV., SCREW PIN, 30,000 LBS	3
SIGNAGE		
446825	SIGN, DANGER, HIGH VOLTAGE KEEP AWAY, ALUMINUM/POLYCARBONATE	2
CROSSBRACE		
463256	BRACE, X ASSEMBLY W/ CENTER CLAMP, 40,000 LB TENSION CAP, 54,000 LB COMPRESSION CAP, WEATHERING STEEL, 26 FT 0 IN CENTER TO CENTER	1
461579	WASHER, SQUARE, FLAT, GALVANIZED, 3 X 3 IN, FOR1 IN BOLT	8
CROSSARM		
462611	CROSSARM, STEEL, 6–SIDED, 53', 345kV SEA–1, INCLUDES STRAP	1
464343	HARDWARE, MOUNTING, BOLTS AND WASHERS, FOR 345kV TANGENT STEEL ARM, CORTEN	2
BRIDLE GUY		
179513	GRIP, PREFORMED, 19#8 AW	2
453345	TURNBUCKLE, GALV. JAW–JAW CONNECTION, 1" BOLT, 12" TAKE–UP, 45K	1
177611	FT. CABLE, BARE, #8 ALUMOWELD, 19 STRAND, ALUMINUM	25
176648	SHACKLE, ANCHOR, GALV., 78K LBS, WITH1" BOLT	2
437024	ROLLER, GUY, FOR 19#10	2
178599	CONNECTOR, COMPRESSION, 19#8 AW TO #2 CU	2
177634	FT. CABLE, BARE, #2 COPPER, 7 STRAND	10 FT
176767	TEE, MOUNTING, GALV, 4"X9", 15/16" MOUNTING HOLES, 1–1/8" STEM HOLE	2

NOTES:

1. APPLY SILICONE SEALANT (SC 462918) TO ALL FIELD DRILLED HOLES.

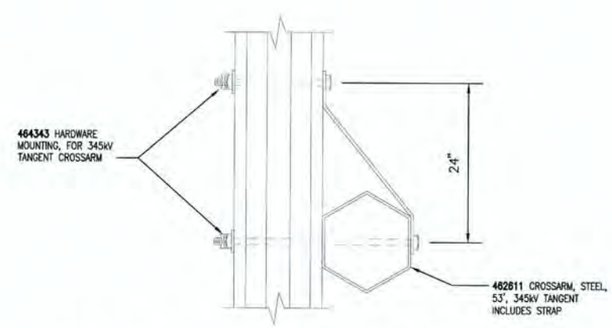

CROSSARM ATTACHMENT DETAIL (3)

SCALE: NTS 1of1

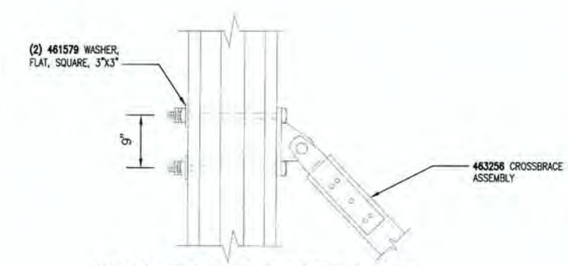

CROSSBRACE DETAIL (4)

SCALE: NTS 1of1

STATE OF NEW HAMPSHIRE — GARRETT E. LUSZCZKI No. 15003 — LICENSED PROFESSIONAL ENGINEER — 12/19/2017

CONTRACT SERVICES

REV	DESCRIPTION	ENG/PE#	DATE	DRN	CHKD	APPR
2	AS BUILT WO# T1318A1	GEL/15003	12/19/17	JJD	GEL	GEL
1	ISSUED FOR PROJECT RECORD	GEL/15003	12/15/17	JJD	BAF	GEL
0	ISSUED FOR CONSTRUCTION	GEL/15003	9/23/16	JJD	BAF	GEL
DWG REV	EPN/DESCRIPTION	CONT/PE#	DATE	DRN	CHKD	APPR

EVERSOURCE ENERGY

LINE 3124 345kV TRANSMISSION
SEA–HF FRAMING DETAIL
STEEL POLE TANGENT

T 2
DRAWN JJD/TRC
ENGINEER GEL/TRC
CHECKED CRP/TRC
APPROVED GEL/TRC
DATE 02/05/16

SCALE N.T.S. | FILE: 312405001.DWG | IMAGE: | DRAWING NO. 312405001

12/19/2017 3:47 PM – jdoody – C:\pwworking\eme\pw1\jdoody\d1045458\312405001.dwg – 11X17

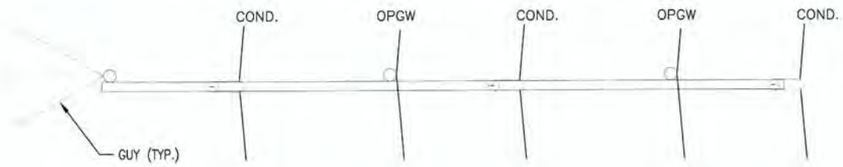

PLAN VIEW

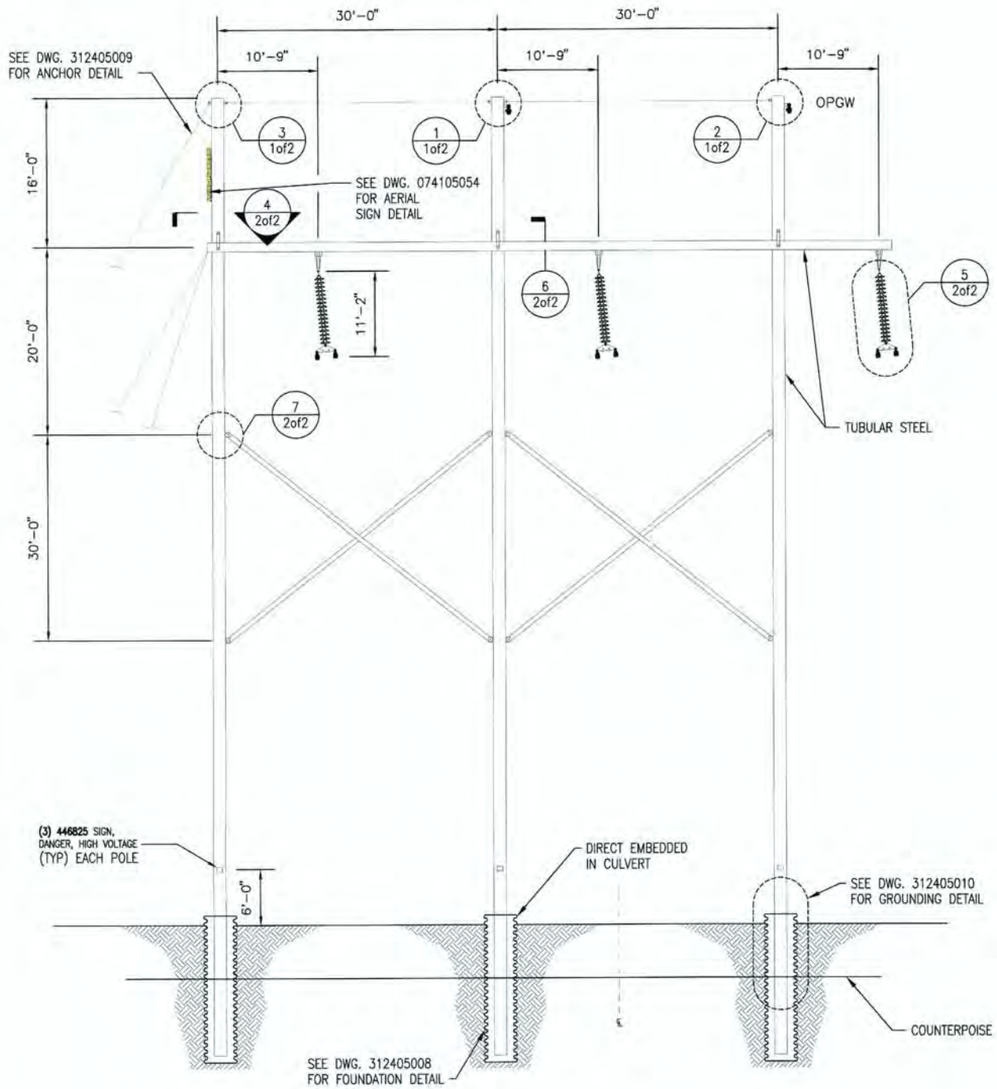

SEB-1 ELEVATION

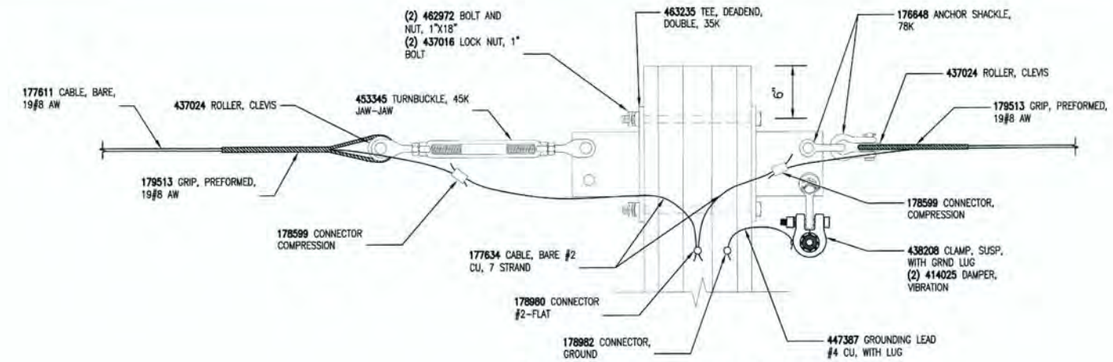

OPGW & BRIDLE GUY DETAIL (1)

SCALE: NTS 1of2

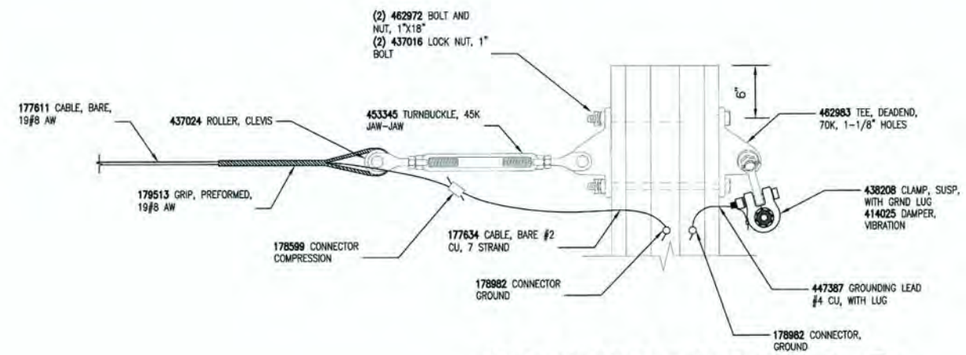

OPGW & BRIDLE GUY DETAIL (2)

SCALE: NTS 1of2

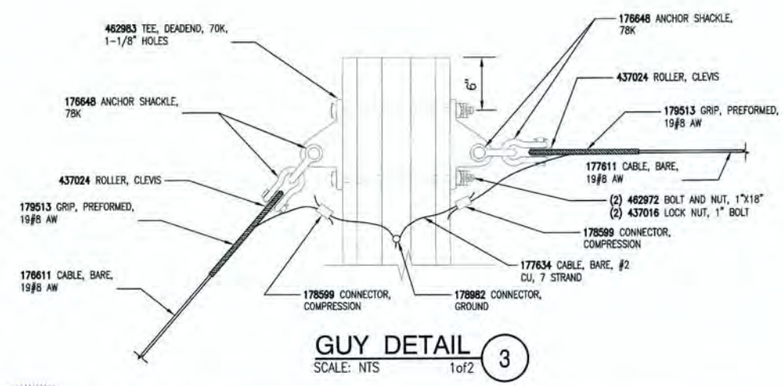

GUY DETAIL (3)

SCALE: NTS 1of2

STATE OF NEW HAMPSHIRE
GARRETT E LUSZCZKI
No. 15003
LICENSED
PROFESSIONAL ENGINEER
12/19/2017

NOTES:

1. APPLY SILICONE SEALANT (SC 462918) TO ALL FIELD DRILLED HOLES.

REV	DESCRIPTION	ENG/PE#	DATE	DRN	CHKD	APPR
2	AS BUILT WO# T1318A1	GEL/15003	12/19/17	JJD	GEL	GEL
1	ISSUED FOR PROJECT RECORD	GEL/15003	12/15/17	JJD	BAF	GEL
0	ISSUED FOR CONSTRUCTION	GEL/15003	9/23/16	JJD	BAF	GEL

CONTRACT SERVICES

DWG REV | EPN/DESCRIPTION | CONT/PE# | DATE | DRN | CHKD | APPR

EVERSOURCE ENERGY

LINE 3124 345kV TRANSMISSION
SEB-1 FRAMING DETAIL
STEEL POLE RUNNING ANGLE
SHEET 1

T	2
DRAWN	JJD/TRC
ENGINEER	GEL/TRC
CHECKED	CRP/TRC
APPROVED	GEL/TRC
DATE	02/05/16
SCALE	N.T.S.
FILE	312405002.DWG
IMAGE	
DRAWING NO.	312405002

ES VER: 11/2015

12/19/2017 3:49 PM - jdoody - C:\pwworkingemp\pw1\jdoody\d1045458\312405002.dwg - SH.1

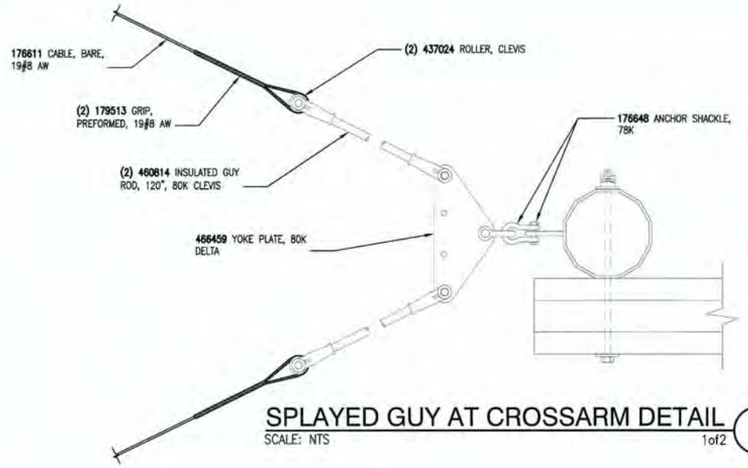

SPLAYED GUY AT CROSSARM DETAIL (4)

SCALE: NTS 1of2

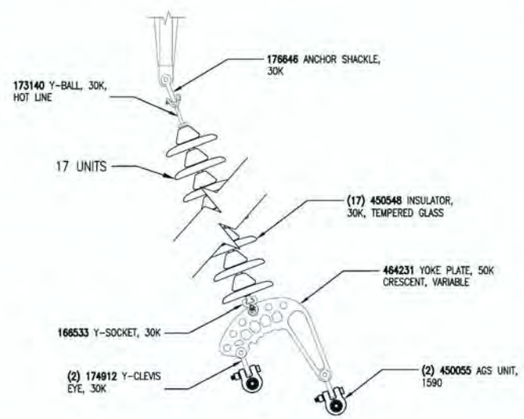

INSULATOR DETAIL (5)

SCALE: NTS 1of2

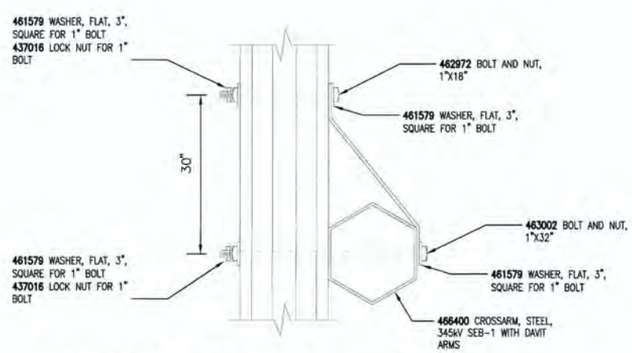

CROSSARM ATTACHMENT DETAIL (6)

SCALE: NTS 1of2

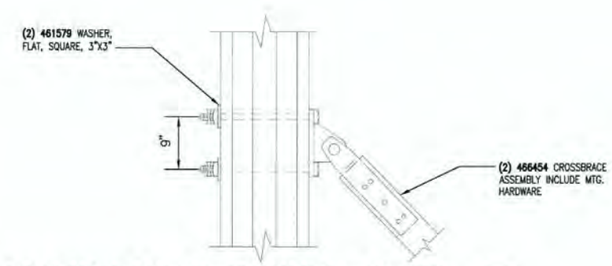

CROSSBRACE ATTACHMENT DETAIL (7)

SCALE: NTS 1of2

MATERIAL LIST

STOCK CODE	DESCRIPTION	QTY (EA UNLESS NOTED)
OPGW ATTACHMENT		
438208	CLAMP, SUSP., AGS, OPGW, 0.633-0.666 DIA WITH GROUND LUG	2
414025	DAMPER, VIBRATION, SPIRAL, .564-.760", FOR FIBER	4
178982	CONNECTOR, GROUNDING, SERVIT POST, #2-2/0 STR. CU., (2-3/0 SOL.)	2
447387	GROUNDING LEAD, F/OPGW DE, 4', #4 CU, W/ LUG	2
GROUNDING		
178982	CONNECTOR, GROUNDING, SERVIT POST, #2-2/0 STR. CU., (2-3/0 SOL.)	6
446240	CONNECTOR, C-TAP, 3#8 CW TO 3#8 CW	15
177820	CABLE, BARE, COPPERWELD, 3#8	250 FT
137613	CONNECTOR, GROUNDING, 3#8 CWLD TO FLAT	6
CONDUCTOR ATTACHMENT		
450055	CLAMP, SUSP., AGS, 1590 ACSS 54/19	6
174912	Y-CLEVIS EYE, 30K	6
464231	PLATE, YOKE, RUNNING ANGLE, BUNDLED COND., VARIABLE ANGLE, 50K	3
166533	CLEVIS, Y-SOCKET, 3/4 IN PIN, 30K, GALV. STEEL	3
450548	INSULATOR, GLASS, M&E RATED, 53-5, 10 IN., 30,000 LBS	51
173140	BALL, Y-CLEVIS, HOTLINE EXTENSION LINK, GALVANIZED STEEL, 30,000 LBS.	3
176646	SHACKLE, ANCHOR, 5/8 IN., BOLT/NUT/KEY, GALV., SCREW PIN, 30,000 LBS	3
BRIDLE GUYS		
179513	GRIP, PREFORMED, 19#8 AW	4
453345	TURNBUCKLE, GALV. JAW-JAW CONNECTION, 1" BOLT, 12" TAKE-UP, 45K	2
177611	FT. CABLE, BARE, #8 ALUMOWELD, 19 STRAND, ALUMINUM	60 FT
176648	SHACKLE, ANCHOR, GALV., 78K LBS, WITH1" BOLT	4
437024	ROLLER, GUY, FOR 19#10	4
177634	FT. CABLE, BARE, #2 COPPER, 7 STRAND	20 FT
178982	CONNECTOR, GROUNDING, SERVIT POST, #2-2/0 STR. CU., (2-3/0 SOL.)	3
178599	CONNECTOR, COMPRESSION, 19#8 AW TO #2 CU	4
462983	TEE, DEADEND, HEAVY DUTY, 70K, 1-1/8 IN STEM HOLE, 1-1/8 IN MTG HOLE	4
437016	NUT, LOCKING, 1 IN	6
462972	BOLT, MACHINE, 1 IN, 18 IN OAL, 6 IN MIN THRD, STEEL, GALVANIZED, ANSI A325-1998 TYPE 3, HEX HEAD AND NUT	6
463235	TEE, MOUNTING, GALV., 35K, DOUBLE, 1-1/8" STEM HOLE, 1-1/8" MTG HOLE	2
SINGLE DOWN GUY		
179513	GRIP, PREFORMED, 19#8 AW	2
177611	FT. CABLE, BARE, #8 ALUMOWELD, 19 STRAND, ALUMINUM	135 FT
176648	SHACKLE, ANCHOR, GALV., 78K LBS, WITH1" BOLT	2
437024	ROLLER, GUY, FOR 19#10	1
177634	FT. CABLE, BARE, #2 COPPER, 7 STRAND	4 FT
178982	CONNECTOR, GROUNDING, SERVIT POST, #2-2/0 STR. CU., (2-3/0 SOL.)	1
178599	CONNECTOR, COMPRESSION, 19#8 AW TO #2 CU	1
SPLAYED GUY		
179513	GRIP, PREFORMED, 19#8 AW	4
177611	FT. CABLE, BARE, #8 ALUMOWELD, 19 STRAND, ALUMINUM	270 FT
176648	SHACKLE, ANCHOR, GALV., 78K LBS, WITH1" BOLT	2
460814	INSULATOR, STRAIN, FIBERGLASS, 120", 80K, CLEVIS-CLEVIS	2
466459	PLATE, YOKE, DELTA, 80K, 1-1/4 IN HOLES	1
437024	ROLLER, GUY, FOR 19#10	2
COUNTERPOISE		
446240	CONNECTOR, C-TAP, 3#8 CW TO 3#8 CW	5
177820	CABLE, BARE, COPPERWELD, 3#8	150 FT
SIGNAGE		
446825	SIGN, DANGER, HIGH VOLTAGE KEEP AWAY, ALUMINUM/POLYCARBONATE	3
CROSSBRACE		
466454	X-BRACE, STEEL, HEAVY DUTY, 345kV SEB-1, 30' POLE SPACING, INCLUDES CENTER CLAMP & MOUNTING HARDWARE	2
461579	WASHER, SQUARE, FLAT, GALVANIZED, 3 X 3 IN, F/1 IN BOLT	8
CROSSARM		
466400	CROSSARM, STEEL, 6-SIDED, 72' 2", 345kV SEB-1, WITH DAVIT ARMS, INCLUDES HANGING STRAP	1
437016	NUT, LOCKING, 1 IN	6
462972	BOLT, MACHINE, 1 IN, 18 IN OAL, 6 IN MIN THRD, STEEL, GALVANIZED, ANSI A325-1998 TYPE 3, HEX HEAD AND NUT	3
463002	BOLT, MACHINE, 1 IN, 32 IN OAL, 6 IN MIN THRD, STEEL	3
461579	WASHER, SQUARE, FLAT, GALVANIZED, 3 X 3 IN, FOR1 IN BOLT	12

NOTES:

1. APPLY SILICONE SEALANT (SC 462918) TO ALL FIELD DRILLED HOLES.

STATE OF NEW HAMPSHIRE
GARRETT E. LUSZCZKI
No. 15003
LICENSED PROFESSIONAL ENGINEER
12/19/2017

CONTRACT SERVICES

REV	DESCRIPTION	ENG/PE#	DATE	DRN	CHKD	APPR
2	AS BUILT WO# T1318A1	GEL/15003	12/19/17	JJD	GEL	GEL
1	ISSUED FOR PROJECT RECORD	GEL/15003	12/15/17	JJD	BAF	GEL
0	ISSUED FOR CONSTRUCTION	GEL/15003	8/23/16	JJD	BAF	GEL
DWG REV	EFN/DESCRIPTION	CONT/PE#	DATE	DRN	CHKD	APPR

EVERSOURCE ENERGY

LINE 3124 345kV TRANSMISSION
SEB-1 FRAMING DETAIL
STEEL POLE RUNNING ANGLE
SHEET 2

T	2
DRAWN	JJD/TRC
ENGINEER	GEL/TRC
CHECKED	CRP/TRC
APPROVED	GEL/TRC
DATE	02/05/16
SCALE	N.T.S.
FILE: 312405002.DWG	
IMAGE:	
DRAWING NO.	312405002

ES VER: 11/2015

12/19/2017 3:49 PM - jdoody - C:\pwworking\eme\jdoody\d1045458\312405002.dwg - S1-2

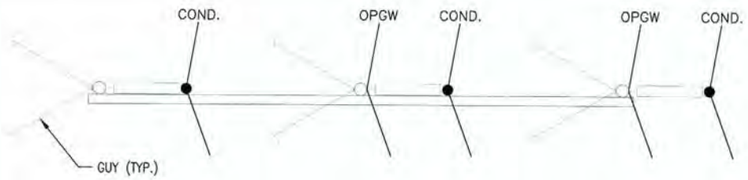

PLAN VIEW

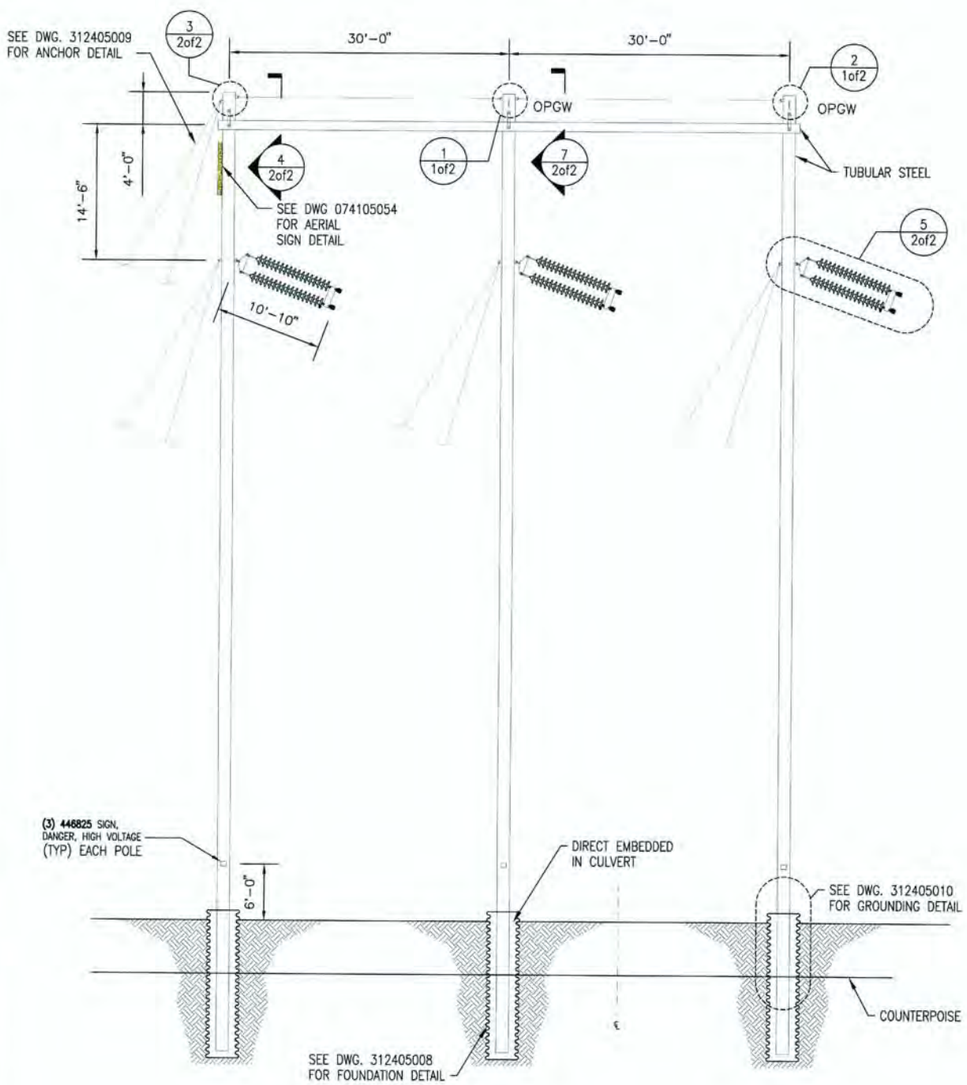

SEC-1 ELEVATION

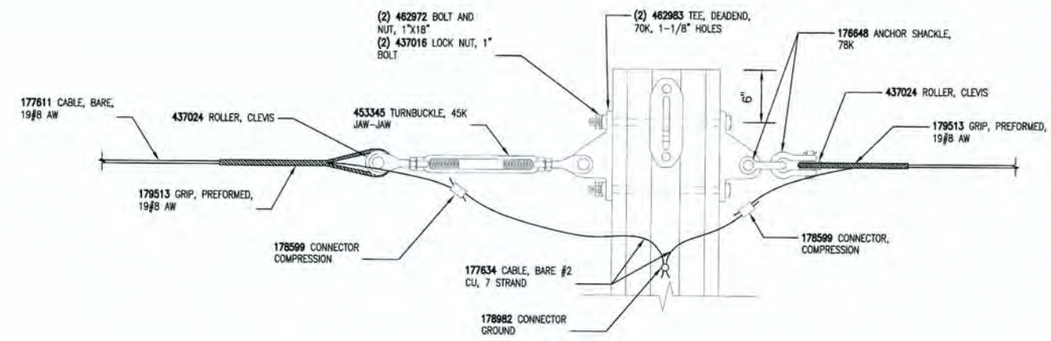

BRIDLE GUY DETAIL

SCALE: NTS

1of2 (1)

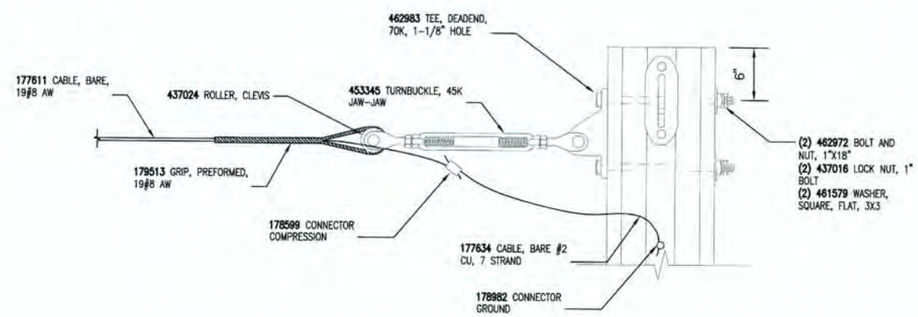

BRIDLE GUY DETAIL

SCALE: NTS

1of2 (2)

STATE OF NEW HAMPSHIRE
GARRETT E. LUSZCZKI
No. 15003
LICENSED
PROFESSIONAL ENGINEER
12/19/2017

NOTES:

1. APPLY SILICONE SEALANT (SC 462918) TO ALL FIELD DRILLED HOLES.

REV	DESCRIPTION	ENG/PE#	DATE	DRN	CHKD	APPR
2	AS BUILT WO# T1318A1	GEL/15003	12/19/17	JJD	GEL	GEL
1	ISSUED FOR PROJECT RECORD	GEL/15003	12/15/17	JJD	BAF	GEL
0	ISSUED FOR CONSTRUCTION	GEL/15003	9/23/16	JJD	BAF	GEL
DWG REV	EPN/DESCRIPTION	CONT/PE#	DATE	DRN	CHKD	APPR

CONTRACT SERVICES

EVERSOURCE ENERGY

LINE 3124 345kV TRANSMISSION
SEC-1 FRAMING DETAIL
STEEL POLE RUNNING ANGLE
SHEET 1

T	2
DRAWN	JJD/TRC
ENGINEER	GEL/TRC
CHECKED	CRP/TRC
APPROVED	GEL/TRC
DATE	02/05/16
SCALE	N.T.S.
FILE: 312405003.DWG	
IMAGE:	
DRAWING NO.	312405003

ES VER: 11/2015

12/19/2017 3:51 PM - jdoody - C:\pwworkingemp\pw1\jdoody\d1045458\312405003.dwg - SR-1

ES VER: 11/2015

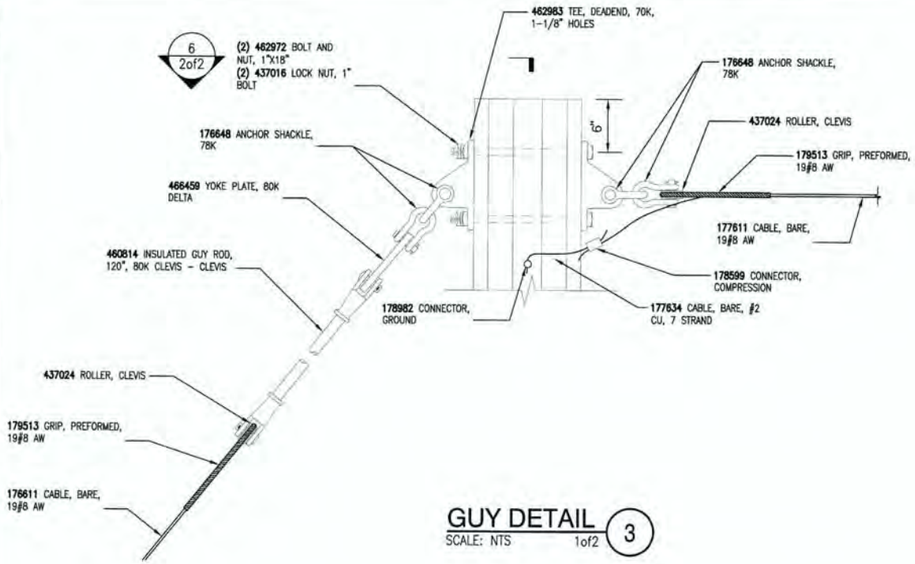

GUY DETAIL (3)

SCALE: NTS 1of2

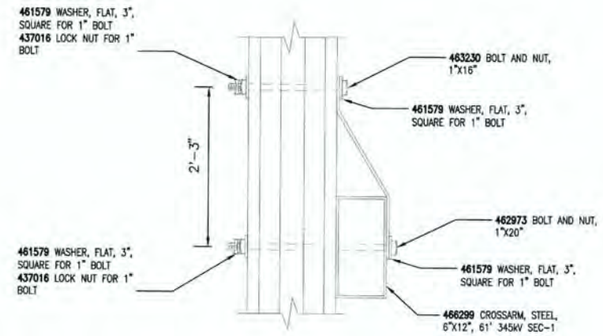

CROSSARM ATTACHMENT DETAIL (4)

SCALE: NTS 1of2

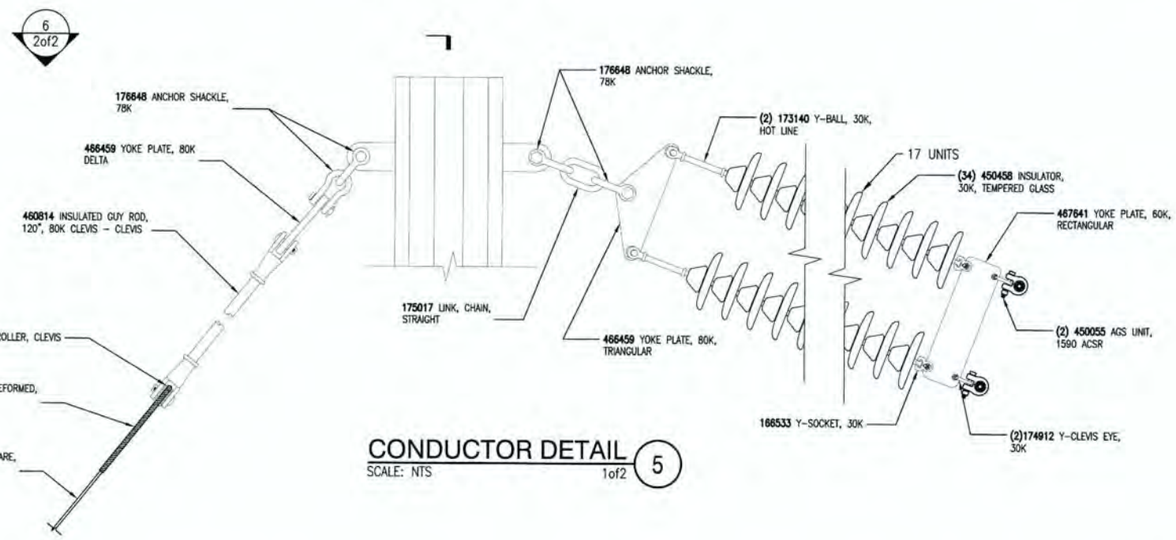

CONDUCTOR DETAIL (5)

SCALE: NTS 1of2

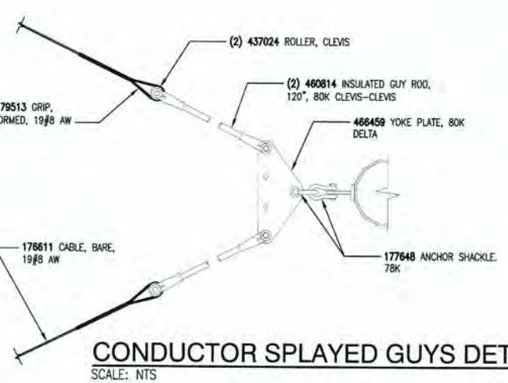

CONDUCTOR SPLAYED GUYS DETAIL (6)

SCALE: NTS 2of2

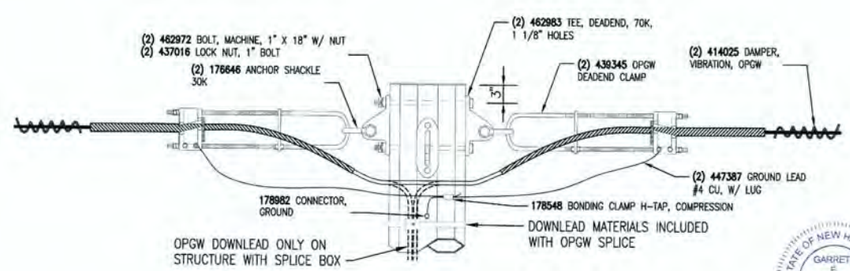

OPGW DETAIL (7)

SCALE: NTS 1of2

STATE OF NEW HAMPSHIRE
GARRETT E. LUSZCZKI
No. 15003
LICENSED PROFESSIONAL ENGINEER
12/19/2017

MATERIAL LIST

STOCK CODE	DESRIPTION	QTY(EA UNLESS NOTED)
OPGW ATTACHMENT		
176646	SHACKLE, ANCHOR, 5/8 IN., BOLT/NUT/KEY, GALV., SCREW PIN, 30,000 LBS	4
439345	CLAMP, DEAD END ASSEMBLY, OPGW, 0.648" TO 0.664", U-BOLT	4
447387	GROUNDING LEAD, F/OPGW DE, 4', #4 CU, W/ LUG	4
462983	TEE, DEADEND, HEAVY DUTY, 70K, 1-1/8 IN STEM HOLE, 1-1/8 IN MTG HOLE	4
462972	BOLT, MACHINE, 1 IN, 18 IN OAL, 6 IN MIN THRD, STEEL, GALVANIZED, ANSI A325-1998 TYPE 3, HEX HEAD AND NUT	4
437016	NUT, LOCKING, 1 IN	4
178548	CONNECTOR, COMPRESSION, #2-#6 TO #2-#6	2
178982	CONNECTOR, GROUNDING, SERVIT POST, #2-2/0 STR. CU., (2-3/0 SOL.)	2
414025	DAMPER, VIBRATION, SPIRAL, .564-.760", FOR FIBER	4
GROUNDING		
178982	CONNECTOR, GROUNDING, SERVIT POST, #2-2/0 STR. CU., (2-3/0 SOL.)	6
446240	CONNECTOR, C-TAP, 3#8 CW TO 3#8 CW	15
177820	CABLE, BARE, COPPERWELD, 3#8	250 FT
137613	CONNECTOR, GROUNDING, 3#8 CWLD TO FLAT	6
CONDUCTOR ATTACHMENT		
450055	CLAMP, SUSP., AGS, 1590 ACSS 54/19	6
174912	Y-CLEVIS EYE, 30K	6
467641	PLATE, YOKE, RECTANGULAR, 60K	3
466459	PLATE, YOKE, DELTA, 80K, 1-1/4 IN HOLES	3
450548	INSULATOR, GLASS, M&E RATED, 53-5, 10 IN., 30,000 LBS	102
173140	BALL, Y-CLEVIS, HOTLINE EXTENSION LINK, GALVANIZED STEEL, 30,000 LBS.	6
176648	SHACKLE, ANCHOR, GALV., 78K LBS, WITH1" BOLT	6
166533	CLEVIS, Y-SOCKET, 3/4 IN PIN, 30K, GALV. STEEL	6
175017	LINK, STRAIGHT	3
BRIDLE GUY		
179513	GRIP, PREFORMED, 19#8 AW	4
453345	TURNBUCKLE, GALV. JAW-JAW CONNECTION, 1" BOLT, 12" TAKE-UP, 45K	2
177611	FT. CABLE, BARE, #8 ALUMOWELD, 19 STRAND, ALUMINUM	60 FT
176648	SHACKLE, ANCHOR, GALV., 78K LBS, WITH1" BOLT	4
437024	ROLLER, GUY, FOR 19#10	4
177634	FT. CABLE, BARE, #2 COPPER, 7 STRAND	20 FT
178982	CONNECTOR, GROUNDING, SERVIT POST, #2-2/0 STR. CU., (2-3/0 SOL.)	4
178599	CONNECTOR, COMPRESSION, 19#8 AW TO #2 CU	4
462983	TEE, DEADEND, HEAVY DUTY, 70K, 1-1/8 IN STEM HOLE, 1-1/8 IN MTG HOLE	5
461579	WASHER, SQUARE, FLAT, GALVANIZED, 3 X 3 IN, FOR 1 IN BOLT	2
437016	NUT, LOCKING, 1 IN	6
462972	BOLT, MACHINE, 1 IN, 18 IN OAL, 6 IN MIN THRD, STEEL, GALVANIZED, ANSI A325-1998 TYPE 3, HEX HEAD AND NUT	6
SPLAYED GUYS		
179513	GRIP, PREFORMED, 19#8 AW	16
177611	FT. CABLE, BARE, #8 ALUMOWELD, 19 STRAND, ALUMINUM	800 FT
176648	SHACKLE, ANCHOR, GALV., 78K LBS, WITH1" BOLT	8
460814	INSULATOR, STRAIN, FIBERGLASS, 120", 80K, CLEVIS-CLEVIS	8
466459	PLATE, YOKE, DELTA, 80K, 1-1/4 IN HOLES	4
437024	ROLLER, GUY, FOR 19#10	8
COUNTERPOISE		
446240	CONNECTOR, C-TAP, 3#8 CW TO 3#8 CW	10
177820	CABLE, BARE, COPPERWELD, 3#8	200 FT
SIGNAGE		
446825	SIGN, DANGER, HIGH VOLTAGE KEEP AWAY, ALUMINUM/POLYCARBONATE	3
CROSSARM		
466299	CROSSARM, STEEL, 12" X 6", 61', 345kV SEC-1 INCLUDES HANGING STRAP	1
462973	BOLT, MACHINE, 1 IN, 20 IN OAL, 6 IN MIN THRD, STEEL, GALVANIZED, ANSI A325-1998 TYPE 3, HEX HEAD AND NUT	3
463230	BOLT, MACHINE, 1 IN, 16 IN OAL, 6 IN MIN THRD, STEEL, UNGALVANIZED, ANSI A325-1998 TYPE 3, HEX HEAD AND NUT	3
437016	NUT, LOCKING, 1 IN	6
461579	WASHER, SQUARE, FLAT, GALVANIZED, 3 X 3 IN, FOR1 IN BOLT	12

NOTES:

1. APPLY SILICONE SEALANT (SC 462918) TO ALL FIELD DRILLED HOLES.

CONTRACT SERVICES

REV	DESCRIPTION	ENG/PE#	DATE	DRN	CHKD	APPR
2	AS BUILT WO# T1318A1	GEL/15003	12/19/17	JJD	GEL	GEL
1	ISSUED FOR PROJECT RECORD	GEL/15003	12/15/17	JJD	BAF	GEL
0.1	RE-ISSUED FOR CONSTRUCTION	GEL/15003	5/5/17	JJD	BAF	GEL
0	ISSUED FOR CONSTRUCTION	GEL/15003	9/23/16	JJD	BAF	GEL
DWG REV	EPN/DESCRIPTION	CONT/PE#	DATE	DRN	CHKD	APPR

EVERSOURCE ENERGY

LINE 3124 345kV TRANSMISSION
SEC-1 FRAMING DETAIL
STEEL POLE RUNNING ANGLE
SHEET 2

T	2
DRAWN	JJD/TRC
ENGINEER	GEL/TRC
CHECKED	CRP/TRC
APPROVED	GEL/TRC
DATE	02/05/16
SCALE	N.T.S.
FILE: 312405003.DWG	
IMAGE:	
DRAWING NO.	312405003

12/19/2017 3:51 PM - jjbody - C:\pwworking\eep\pw1\jbody\d1045458\312405003.dwg - SH.2

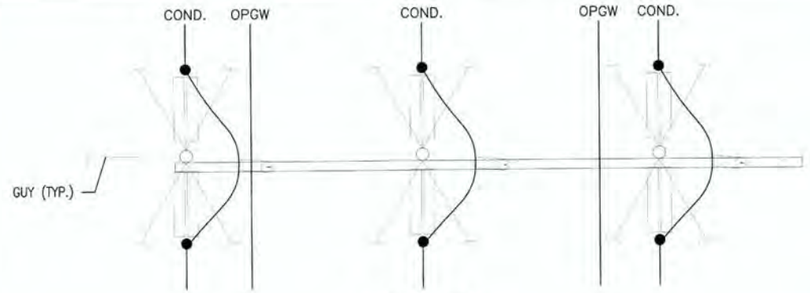

PLAN VIEW

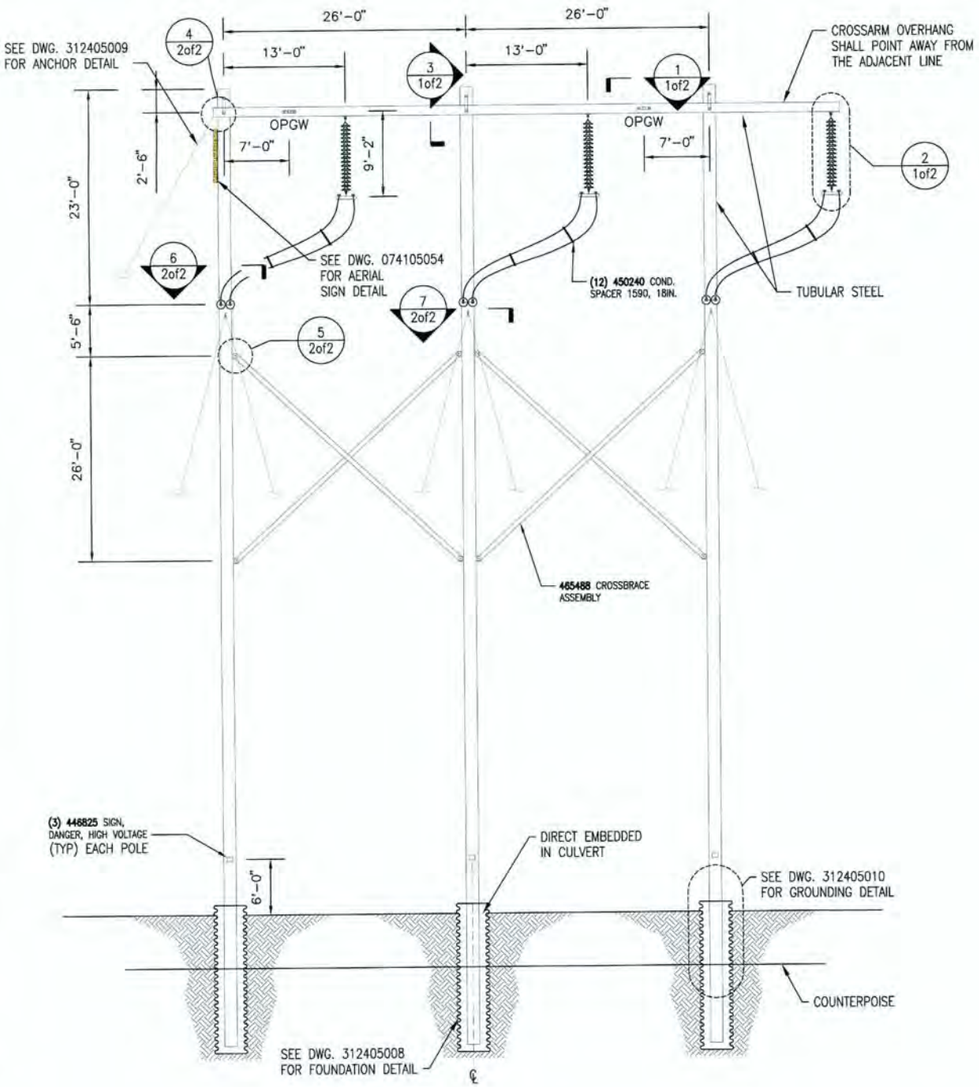

SED-1 ELEVATION

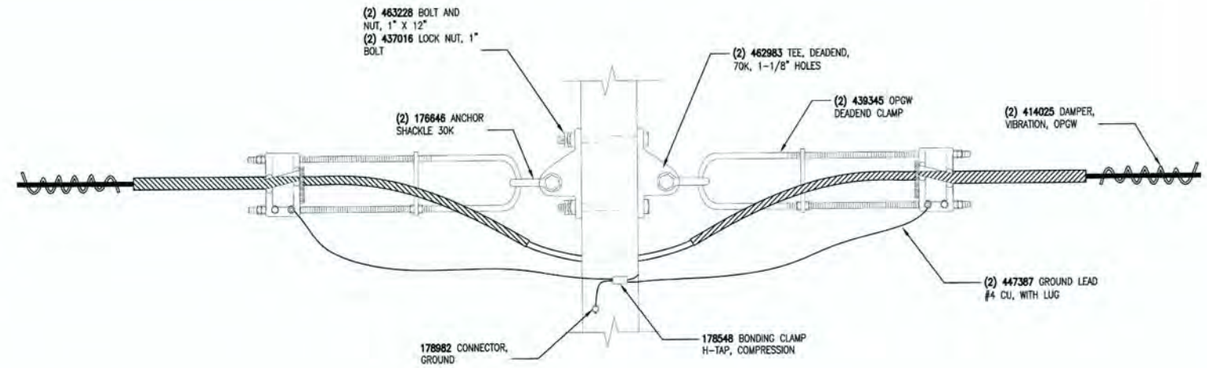

OPGW DETAIL PLAN VIEW (1)

SCALE: NTS 1of2

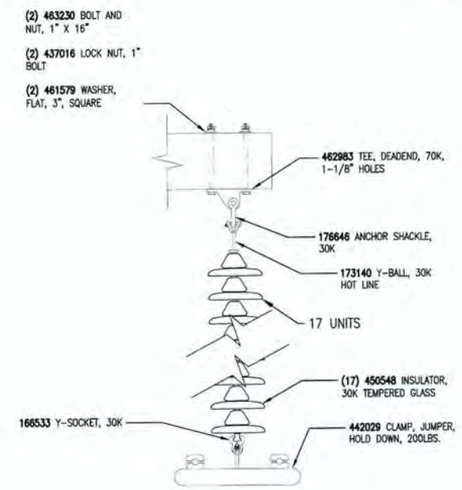

INSULATOR JUMPER DETAIL (2)

SCALE: NTS 1of2

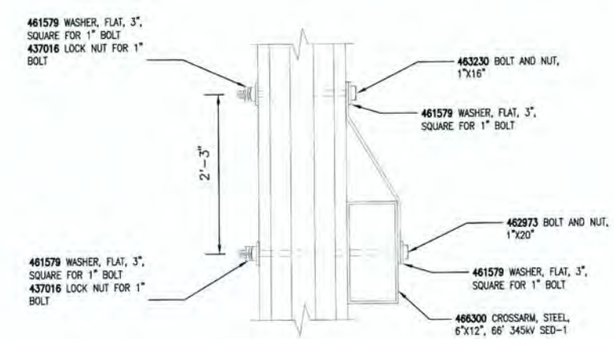

CROSSARM ATTACHMENT DETAIL (3)

SCALE: NTS 1of2

STATE OF NEW HAMPSHIRE
GARRETT E. LUSZCZKI
No. 15003
LICENSED
PROFESSIONAL ENGINEER
12/19/2017

NOTES:

1. APPLY SILICONE SEALANT (SC 462918) TO ALL FIELD DRILLED HOLES.

DWG REV	EPN/DESCRIPTION	CONT/PE#	DATE	DRN	CHKD	APPR
2	AS BUILT WO# T1318A1	GEL/15003	12/19/17	JJD	GEL	GEL
1	ISSUED FOR PROJECT RECORD	GEL/15003	12/15/17	JJD	BAF	GEL
0	ISSUED FOR CONSTRUCTION	GEL/15003	9/23/16	JJD	BAF	GEL

CONTRACT SERVICES

REV	DESCRIPTION	ENG/PE#	DATE	DRN	CHKD	APPR

EVERSOURCE ENERGY

LINE 3124 345kV TRANSMISSION
SED-1 FRAMING DETAIL
STEEL POLE TANGENT DE
SHEET 1

T 2
DRAWN JJD/TRC
ENGINEER GEL/TRC
CHECKED CRP/TRC
APPROVED GEL/TRC
DATE 02/05/16

SCALE N.T.S.
FILE: 312405004.DWG
IMAGE:
DRAWING NO. 312405004

ES VER: 11/2015

12/19/2017 3:53 PM - jdoody - C:\pwworkingerm\pw1\jdoody\d1045458\312405004.dwg - Sht1

ES VER: 11/2015

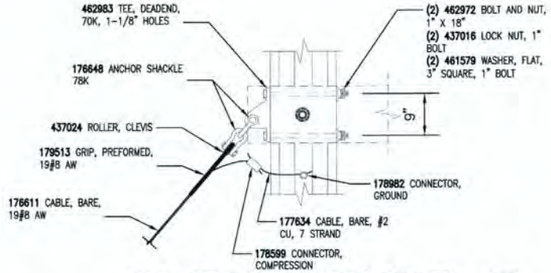

GUY AT CROSSARM DETAIL (4)

SCALE: NTS 1of2

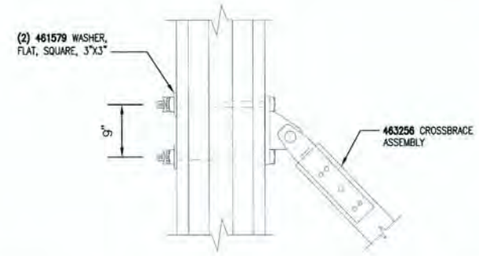

CROSSBRACE ATTACHMENT DETAIL (5)

SCALE: NTS 1of2

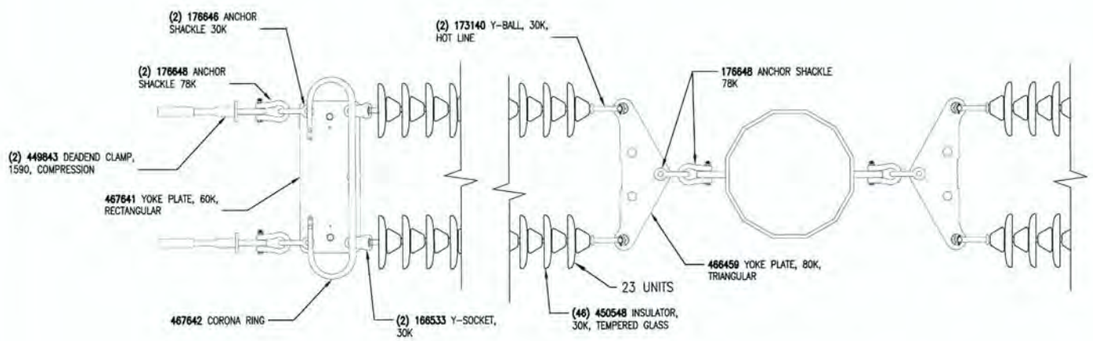

CONDUCTOR DETAIL (6)

SCALE: NTS 1of2

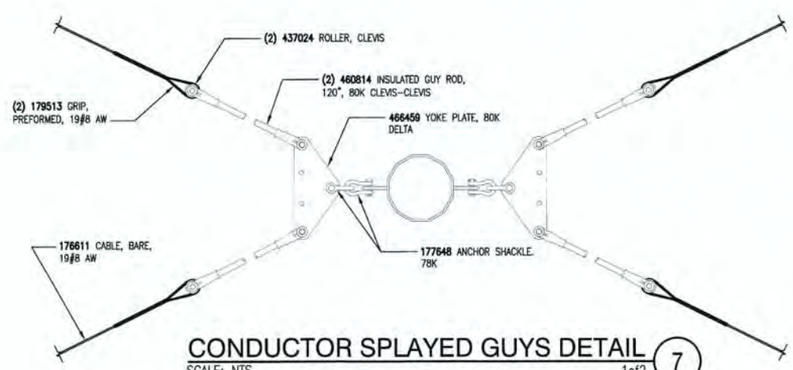

CONDUCTOR SPLAYED GUYS DETAIL (7)

SCALE: NTS 1of2

MATERIAL LIST

STCK CODE	DESCRIPTION	QTY (EA UNLESS NOTED)
OPGW ATTACHMENT		
439345	CLAMP, DEAD END ASSEMBLY, OPGW, 0.648" TO 0.664", U-BOLT	4
414025	DAMPER, VIBRATION, SPIRAL, .564-.760", FOR FIBER	4
178982	CONNECTOR, GROUNDING, SERVIT POST, #2-2/0 STR. CU., (2-3/0 SOL.)	2
447387	GROUNDING LEAD, F/OPGW DE, 4', #4 CU, W/ LUG	4
176646	SHACKLE, ANCHOR, 5/8 IN., BOLT/NUT/KEY, GALV., SCREW PIN, 30,000 LBS	4
178548	CONNECTOR, COMPRESSION, #2-#6 TO #2-#6	2
463228	BOLT, MACHINE, 1 IN, 12 IN OAL, 6 IN MIN THRD, STEEL, UNGALVANIZED, ANSI A325-1998 TYPE 3, HEX HEAD AND NUT	4
437016	NUT, LOCKING, 1 IN	4
462983	TEE, DEADEND, HEAVY DUTY, 70K, 1-1/8 IN STEM HOLE, 1-1/8 IN MTG HOLE	4
GROUNDING		
178982	CONNECTOR, GROUNDING, SERVIT POST, #2-2/0 STR. CU., (2-3/0 SOL.)	6
446240	CONNECTOR, C-TAP, 3#8 CW TO 3#8 CW	15
177820	CABLE, BARE, COPPERWELD, 3#8	250 FT
137613	CONNECTOR, GROUNDING, 3#8 CWLD TO FLAT	6
INSULATOR JUMPER ATTACHMENT		
450240	SPACER, BUNDLED CONDUCTOR, FOR 1590 54/19, 18 IN SPACING, HIGH TEMP	12
442029	CLAMP, JUMPER, HOLD DOWN, 200 LBS., 1590 ACSR	3
166533	CLEVIS, Y-SOCKET, 3/4 IN PIN, 30K, GALV. STEEL	3
450548	INSULATOR, GLASS, M&E RATED, 53-5, 10 IN., 30,000 LBS	51
173140	BALL, Y-CLEVIS, HOTLINE EXTENSION LINK, GALVANIZED STEEL, 30,000 LBS.	3
176646	SHACKLE, ANCHOR, 5/8 IN., BOLT/NUT/KEY, GALV., SCREW PIN, 30,000 LBS	3
462983	TEE, DEADEND, HEAVY DUTY, 70K, 1-1/8 IN STEM HOLE, 1-1/8 IN MTG HOLE	3
463230	BOLT, MACHINE, 1 IN, 16 IN OAL, 6 IN MIN THRD, STEEL, UNGALVANIZED, ANSI A325-1998 TYPE 3, HEX HEAD AND NUT	6
461579	WASHER, SQUARE, FLAT, GALVANIZED, 3 X 3 IN, FOR1 IN BOLT	6
437016	NUT, LOCKING, 1 IN	6
CONDUCTOR ATTACHMENT		
449843	CLAMP, DEADEND, COMPRESSION, 1590 54/19 ACSR	12
176646	SHACKLE, ANCHOR, 5/8 IN., BOLT/NUT/KEY, GALV., SCREW PIN, 30,000 LBS	12
467641	PLATE, YOKE, RECTANGULAR, 60K	6
166533	CLEVIS, Y-SOCKET, 3/4 IN PIN, 30K, GALV. STEEL	12
450548	INSULATOR, GLASS, M&E RATED, 53-5, 10 IN., 30,000 LBS	276
173140	BALL, Y-CLEVIS, HOTLINE EXTENSION LINK, GALVANIZED STEEL, 30,000 LBS.	12
466459	PLATE, YOKE, DELTA, 80K, 1-1/4 IN HOLES	6
176648	SHACKLE, ANCHOR, GALV., 78K LBS, WITH1" BOLT	24
467642	CORONA RING	6
442780	COMPOUND, JOINT, ELECTRICAL, FILLER, STANDARD CAULKING GUN TUBE, 16 OZ., HIGH TEMP	8
SINGLE DOWN GUY		
179513	GRIP, PREFORMED, 19#8 AW	2
177611	FT. CABLE, BARE, #8 ALUMOWELD, 19 STRAND, ALUMINUM	135 FT
176648	SHACKLE, ANCHOR, GALV., 78K LBS, WITH1" BOLT	2
437024	ROLLER, GUY, FOR 19#10	1
177634	FT. CABLE, BARE, #2 COPPER, 7 STRAND	4 FT
178982	CONNECTOR, GROUNDING, SERVIT POST, #2-2/0 STR. CU., (2-3/0 SOL.)	1
178599	CONNECTOR, COMPRESSION, 19#8 AW TO #2 CU	1
462983	TEE, DEADEND, HEAVY DUTY, 70K, 1-1/8 IN STEM HOLE, 1-1/8 IN MTG HOLE	1
437016	NUT, LOCKING, 1 IN	2
461579	WASHER, SQUARE, FLAT, GALVANIZED, 3 X 3 IN, FOR1 IN BOLT	2
462972	BOLT, MACHINE, 1 IN, 18 IN OAL, 6 IN MIN THRD, STEEL, GALVANIZED, ANSI A325-1998 TYPE 3, HEX HEAD AND NUT	2
SPLAYED GUY		
179513	GRIP, PREFORMED, 19#8 AW	24
177611	FT. CABLE, BARE, #8 ALUMOWELD, 19 STRAND, ALUMINUM	1200 FT
176648	SHACKLE, ANCHOR, GALV., 78K LBS, WITH1" BOLT	12
460814	INSULATOR, STRAIN, FIBERGLASS, 120", 80K, CLEVIS-CLEVIS	12
466459	PLATE, YOKE, DELTA, 80K, 1-1/4 IN HOLES	6
437024	ROLLER, GUY, FOR 19#10	12
COUNTERPOISE		
446240	CONNECTOR, C-TAP, 3#8 CW TO 3#8 CW	15
177820	CABLE, BARE, COPPERWELD, 3#8	200 FT
SIGNAGE		
446825	SIGN, DANGER, HIGH VOLTAGE KEEP AWAY, ALUMINUM/POLYCARBONATE	3
CROSSBRACE		
463256	BRACE, X ASSEMBLY W/ CENTER CLAMP, 40,000 LB TENSION CAP, 54,000 LB COMPRESSION CAP, WEATHERING STEEL, 26 FT 0 IN CENTER TO CENTER	2
461579	WASHER, SQUARE, FLAT, GALVANIZED, 3 X 3 IN, FOR1 IN BOLT	8
CROSSARM		
466300	CROSSARM, STEEL, 12" X 6", 66', 345kV SED-1 INCLUDES HANGING STRAP	1
462973	BOLT, MACHINE, 1 IN, 20 IN OAL, 6 IN MIN THRD, STEEL, GALVANIZED, ANSI A325-1998 TYPE 3, HEX HEAD AND NUT	3
463230	BOLT, MACHINE, 1 IN, 16 IN OAL, 6 IN MIN THRD, STEEL, UNGALVANIZED, ANSI A325-1998 TYPE 3, HEX HEAD AND NUT	3
437016	NUT, LOCKING, 1 IN	6
461579	WASHER, SQUARE, FLAT, GALVANIZED, 3 X 3 IN, FOR1 IN BOLT	12

NOTES:

1. APPLY SILICONE SEALANT (SC 462918) TO ALL FIELD DRILLED HOLES.

STATE OF NEW HAMPSHIRE
GARRETT E. LUSZCZKI
No. 15003
LICENSED
PROFESSIONAL ENGINEER
12/19/2017

CONTRACT SERVICES

REV	DESCRIPTION	ENG/PE#	DATE	DRN	CHKD	APPR
2	AS BUILT WO# T1318A1	GEL/15003	12/19/17	JJD	GEL	GEL
1	ISSUED FOR PROJECT RECORD	GEL/15003	12/15/17	JJD	BAF	GEL
0.1	RE-ISSUED FOR CONSTRUCTION	GEL/15003	5/5/17	JJD	BAF	GEL
0	ISSUED FOR CONSTRUCTION	GEL/15003	9/23/16	JJD	BAF	GEL
DWG REV	EPN/DESCRIPTION	CONT/PE#	DATE	DRN	CHKD	APPR

EVERSOURCE ENERGY

LINE 3124 345kV TRANSMISSION
SED-1 FRAMING DETAIL
STEEL POLE TANGENT DE
SHEET 2

T 2
DRAWN JJD/TRC
ENGINEER GEL/TRC
CHECKED CRP/TRC
APPROVED GEL/TRC
DATE 02/05/16

SCALE N.T.S.
FILE: 312405004.DWG
IMAGE:
DRAWING NO. 312405004

12/19/2017 3:53 PM - tdoody - C:\pwworking\eme\pw1\tdoody\d1045458\312405004.dwg - SH2

ES VER: 11/2015

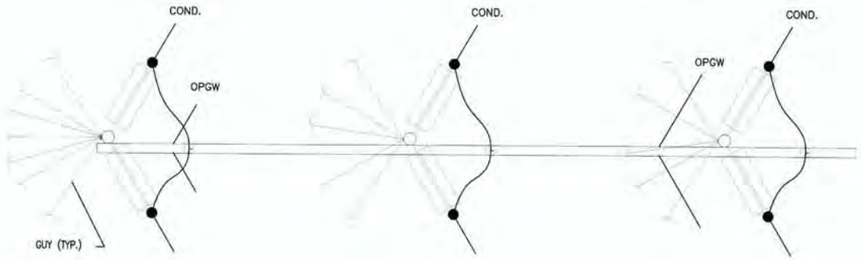

PLAN VIEW

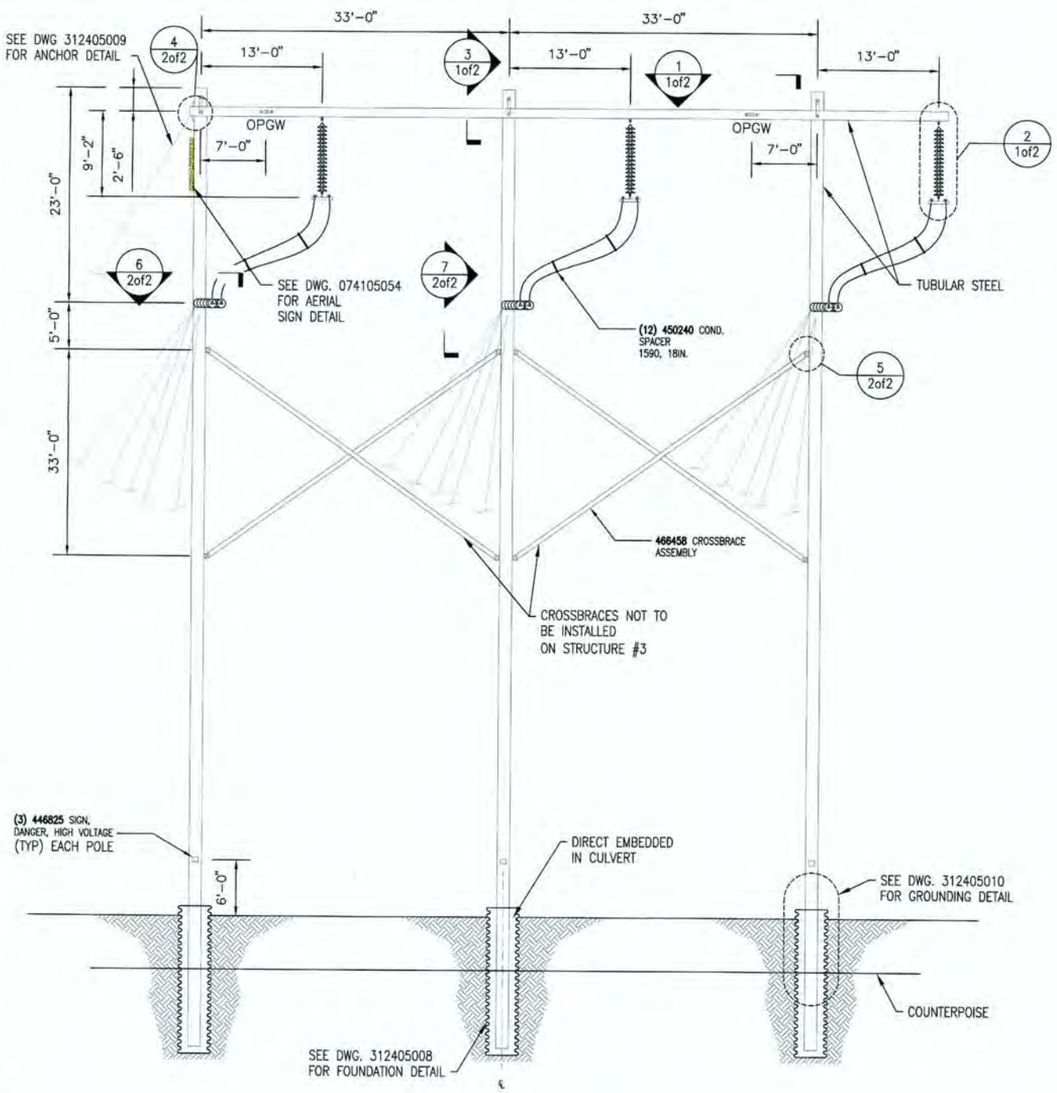

SED-2 ELEVATION

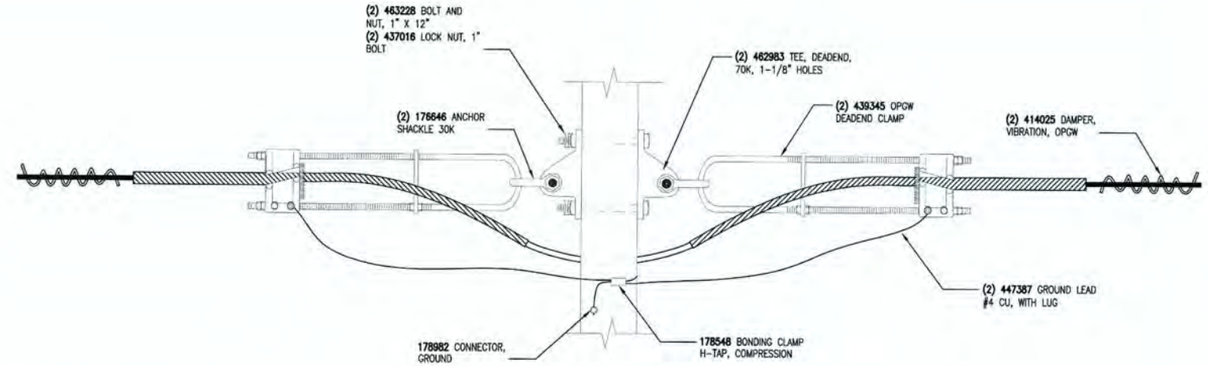

OPGW DETAIL PLAN VIEW (1)

SCALE: NTS 1of2

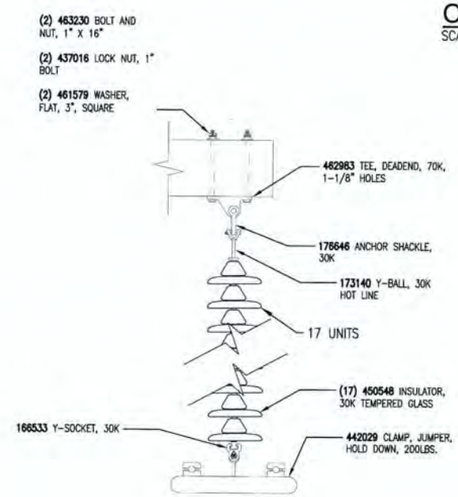

INSULATOR JUMPER DETAIL (2)

SCALE: NTS 1of2

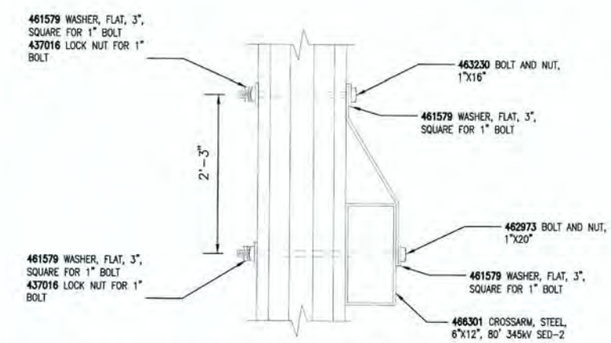

CROSSARM ATTACHMENT DETAIL (3)

SCALE: NTS 1of2

STATE OF NEW HAMPSHIRE
GARRETT E. LUSZCZKI
No. 15003
LICENSED
PROFESSIONAL ENGINEER
12/19/2017

NOTES:

1. APPLY SILICONE SEALANT (SC 462918) TO ALL FIELD DRILLED HOLES.

CONTRACT SERVICES

REV	DESCRIPTION	ENG/PE#	DATE	DRN	CHKD	APPR
2	AS BUILT WO# T1318A1	GEL/15003	12/19/17	JJD	GEL	GEL
1	ISSUED FOR PROJECT RECORD	GEL/15003	12/15/17	JJD	BAF	GEL
0	ISSUED FOR CONSTRUCTION	GEL/15003	9/23/16	JJD	BAF	GEL
DWG REV	EPM/DESCRIPTION	CONT/PE#	DATE	DRN	CHKD	APPR

EVERSOURCE ENERGY

LINE 3124 345kV TRANSMISSION
SED-2 FRAMING DETAIL
STEEL POLE ANGLE DEADEND
SHEET 1

T	2
DRAWN	JJD/TRC
ENGINEER	GEL/TRC
CHECKED	CRP/TRC
APPROVED	GEL/TRC
DATE	02/05/16
SCALE	N.T.S.
FILE: 312405005.DWG	
IMAGE:	
DRAWING NO.	312405005

12/19/2017 3:55 PM - jdoody - C:\pwworking\eprp\pw1\jdoody\d1045408\312405005.dwg - Sh.1

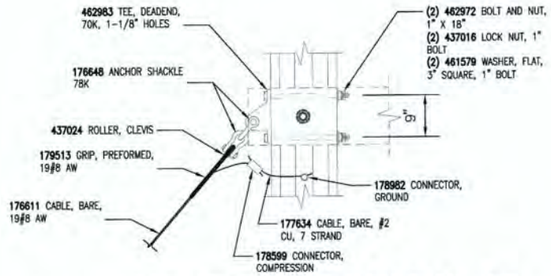

GUY AT CROSSARM DETAIL (4)

SCALE: NTS 1of2

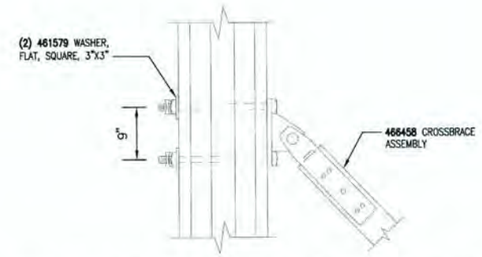

CROSSBRACE ATTACHMENT DETAIL (5)

SCALE: NTS 1of2

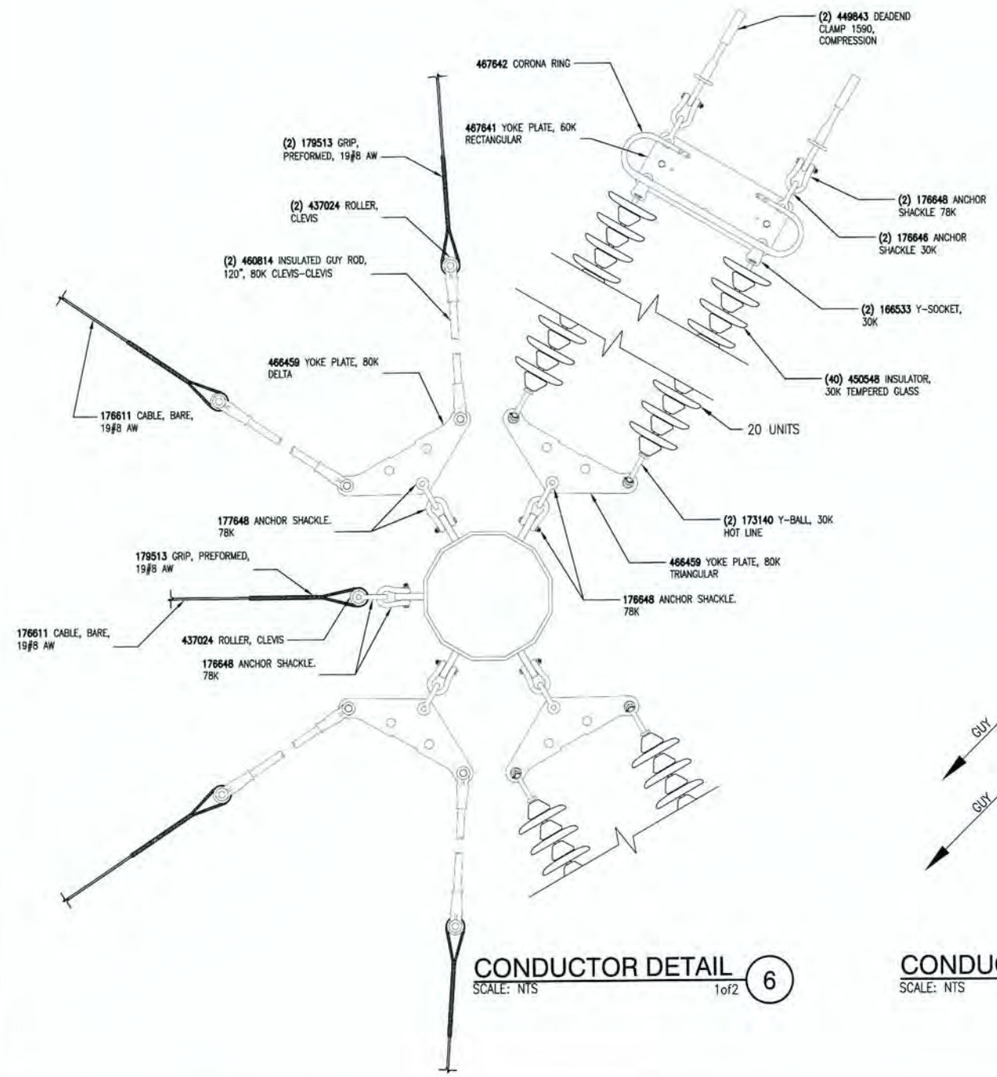

CONDUCTOR DETAIL (6)

SCALE: NTS 1of2

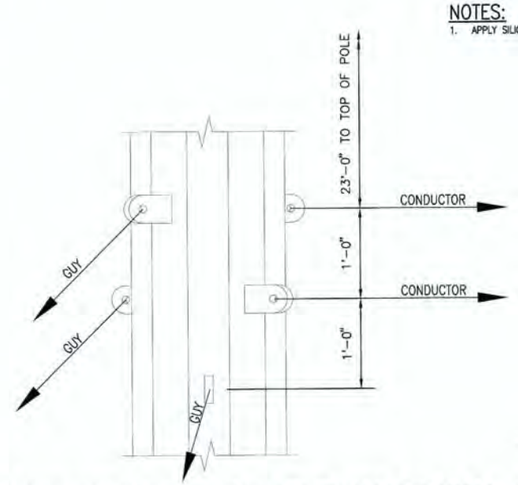

CONDUCTOR ATTACHMENT VANG DETAL (7)

SCALE: NTS 1of2

STATE OF NEW HAMPSHIRE
GARRETT E. LUSZCZKI
No. 15003
LICENSED PROFESSIONAL ENGINEER
12/19/2017

MATERIAL LIST

STOCK CODE	DESCRIPTION	QTY (EA UNLESS NOTED)
OPGW ATTACHMENT		
439345	CLAMP, DEAD END ASSEMBLY, OPGW, 0.648" TO 0.664", U-BOLT	4
414025	DAMPER, VIBRATION, SPIRAL, .564-.760", FOR FIBER	4
178982	CONNECTOR, GROUNDING, SERVIT POST, #2-2/0 STR. CU., (2-3/0 SOL.)	2
447387	GROUNDING LEAD, F/OPGW DE, 4', #4 CU, W/ LUG	4
176646	SHACKLE, ANCHOR, 5/8 IN., BOLT/NUT/KEY, GALV., SCREW PIN, 30,000 LBS	4
178548	CONNECTOR, COMPRESSION, #2-#6 TO #2-#6	2
463228	BOLT, MACHINE, 1 IN, 12 IN OAL, 6 IN MIN THRD, STEEL, UNGALVANIZED, ANSI A325-1998 TYPE 3, HEX HEAD AND NUT	4
437016	NUT, LOCKING, 1 IN	4
462983	TEE, DEADEND, HEAVY DUTY, 70K, 1-1/8 IN STEM HOLE, 1-1/8 IN MTG HOLE	4
GROUNDING		
178982	CONNECTOR, GROUNDING, SERVIT POST, #2-2/0 STR. CU., (2-3/0 SOL.)	6
446240	CONNECTOR, C-TAP, 3#8 CW TO 3#8 CW	15
177820	CABLE, BARE, COPPERWELD, 3#8	250 FT
137613	CONNECTOR, GROUNDING, 3#8 CWLD TO FLAT	6
INSULATOR JUMPER ATTACHMENT		
450240	SPACER, BUNDLED CONDUCTOR, FOR 1590 54/19, 18 IN SPACING, HIGH TEMP	12
442029	CLAMP, JUMPER, HOLD DOWN, 200 LBS., 1590 ACSR	3
166533	CLEVIS, Y-SOCKET, 3/4 IN PIN, 30K, GALV. STEEL	3
450548	INSULATOR, GLASS, M&E RATED, 53-5, 10 IN., 30,000 LBS	51
173140	BALL, Y-CLEVIS, HOTLINE EXTENSION LINK, GALVANIZED STEEL, 30,000 LBS.	3
176646	SHACKLE, ANCHOR, 5/8 IN., BOLT/NUT/KEY, GALV., SCREW PIN, 30,000 LBS	3
462983	TEE, DEADEND, HEAVY DUTY, 70K, 1-1/8 IN STEM HOLE, 1-1/8 IN MTG HOLE	3
463230	BOLT, MACHINE, 1 IN, 16 IN OAL, 6 IN MIN THRD, STEEL, UNGALVANIZED, ANSI A325-1998 TYPE 3, HEX HEAD AND NUT	6
461579	WASHER, SQUARE, FLAT, GALVANIZED, 3 X 3 IN, FOR 1 IN BOLT	6
437016	NUT, LOCKING, 1 IN	6
CONDUCTOR ATTACHMENT		
449843	CLAMP, DEADEND, COMPRESSION, 1590 54/19 ACSR	12
176646	SHACKLE, ANCHOR, 5/8 IN., BOLT/NUT/KEY, GALV., SCREW PIN, 30,000 LBS	12
467641	PLATE, YOKE, RECTANGULAR, 60K	6
166533	CLEVIS, Y-SOCKET, 3/4 IN PIN, 30K, GALV. STEEL	12
450548	INSULATOR, GLASS, M&E RATED, 53-5, 10 IN., 30,000 LBS	240
173140	BALL, Y-CLEVIS, HOTLINE EXTENSION LINK, GALVANIZED STEEL, 30,000 LBS.	12
466459	PLATE, YOKE, DELTA, 80K, 1-1/4 IN HOLES	6
176648	SHACKLE, ANCHOR, GALV., 78K LBS, WITH1" BOLT	24
467642	CORONA RING	6
442780	COMPOUND, JOINT, ELECTRICAL, FILLER, STANDARD CAULKING GUN TUBE, 16 OZ., HIGH TEMP	8

SINGLE DOWN GUY		
179513	GRIP, PREFORMED, 19#8 AW	8
177611	FT. CABLE, BARE, #8 ALUMOWELD, 19 STRAND, ALUMINUM	540 FT
176648	SHACKLE, ANCHOR, GALV., 78K LBS, WITH1" BOLT	8
437024	ROLLER, GUY, FOR 19#10	4
177634	FT. CABLE, BARE, #2 COPPER, 7 STRAND	4 FT
178982	CONNECTOR, GROUNDING, SERVIT POST, #2-2/0 STR. CU., (2-3/0 SOL.)	1
178599	CONNECTOR, COMPRESSION, 19#8 AW TO #2 CU	1
462983	TEE, DEADEND, HEAVY DUTY, 70K, 1-1/8 IN STEM HOLE, 1-1/8 IN MTG HOLE	1
437016	NUT, LOCKING, 1 IN	2
461579	WASHER, SQUARE, FLAT, GALVANIZED, 3 X 3 IN, FOR1 IN BOLT	2
462972	BOLT, MACHINE, 1 IN, 18 IN OAL, 6 IN MIN THRD, STEEL, GALVANIZED, ANSI A325-1998 TYPE 3, HEX HEAD AND NUT	2
SPLAYED GUYS		
179513	GRIP, PREFORMED, 19#8 AW	24
177611	FT. CABLE, BARE, #8 ALUMOWELD, 19 STRAND, ALUMINUM	1200 FT
176648	SHACKLE, ANCHOR, GALV., 78K LBS, WITH1" BOLT	12
460814	INSULATOR, STRAIN, FIBERGLASS, 120", 80K, CLEVIS-CLEVIS	12
466459	PLATE, YOKE, DELTA, 80K, 1-1/4 IN HOLES	6
437024	ROLLER, GUY, FOR 19#10	12
COUNTERPOISE		
446240	CONNECTOR, C-TAP, 3#8 CW TO 3#8 CW	18
177820	CABLE, BARE, COPPERWELD, 3#8	200 FT
SIGNAGE		
446825	SIGN, DANGER, HIGH VOLTAGE KEEP AWAY, ALUMINUM/POLYCARBONATE	3
CROSSBRACE		
466458	X-BRACE, STEEL, HEAVY DUTY, 345kV SED-2, 33' POLE SPACING, INCLUDES CENTER CLAMP & MOUNTING HARDWARE	2
461579	WASHER, SQUARE, FLAT, GALVANIZED, 3 X 3 IN, F/1 IN BOLT	8
CROSSARM		
466301	CROSSARM, STEEL, 12" X 6", 80', 345kV SED-2 INCLUDES HANGING STRAP	1
462973	BOLT, MACHINE, 1 IN, 20 IN OAL, 6 IN MIN THRD, STEEL, GALVANIZED, ANSI A325-1998 TYPE 3, HEX HEAD AND NUT	3
463230	BOLT, MACHINE, 1 IN, 16 IN OAL, 6 IN MIN THRD, STEEL, UNGALVANIZED, ANSI A325-1998 TYPE 3, HEX HEAD AND NUT	3
437016	NUT, LOCKING, 1 IN	6
461579	WASHER, SQUARE, FLAT, GALVANIZED, 3 X 3 IN, FOR1 IN BOLT	12

NOTES:

1. APPLY SILICONE SEALANT (SC 462918) TO ALL FIELD DRILLED HOLES.

CONTRACT SERVICES

REV	DESCRIPTION	ENG/PE#	DATE	DRN	CHKD	APPR
2	AS BUILT WO# T131BA1	GEL/15003	12/19/17	JJD	GEL	GEL
1	ISSUED FOR PROJECT RECORD	GEL/15003	12/15/17	JJD	BAF	GEL
0.1	RE-ISSUED FOR CONSTRUCTION	GEL/15003	5/5/17	JJD	BAF	GEL
0	ISSUED FOR CONSTRUCTION	GEL/15003	9/23/16	JJD	BAF	GEL
DWG REV	EPN/DESCRIPTION	CONT/PE#	DATE	DRN	CHKD	APPR

EVERSOURCE ENERGY

LINE 3124 345kV TRANSMISSION
SED-2 FRAMING DETAIL
STEEL POLE ANGLE DEADEND
SHEET 2

T	2
DRAWN	JJD/TRC
ENGINEER	GEL/TRC
CHECKED	CRP/TRC
APPROVED	GEL/TRC
DATE	02/05/16
SCALE	N.T.S.
FILE: 312405005.DWG	
IMAGE:	
DRAWING NO.	312405005

ES VER: 11/2015

12/19/2017 3:55 PM - jdoody - C:\pwworking\eme\pw1\jdoody\d1045458\312405005.dwg - SH.2

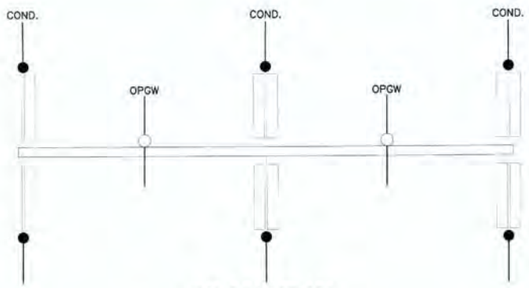

PLAN VIEW

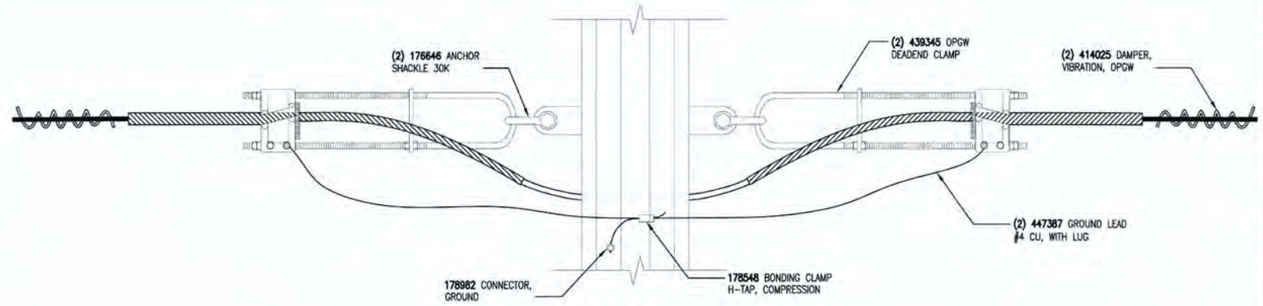

OPGW DETAIL (1)

SCALE: NTS 1of1

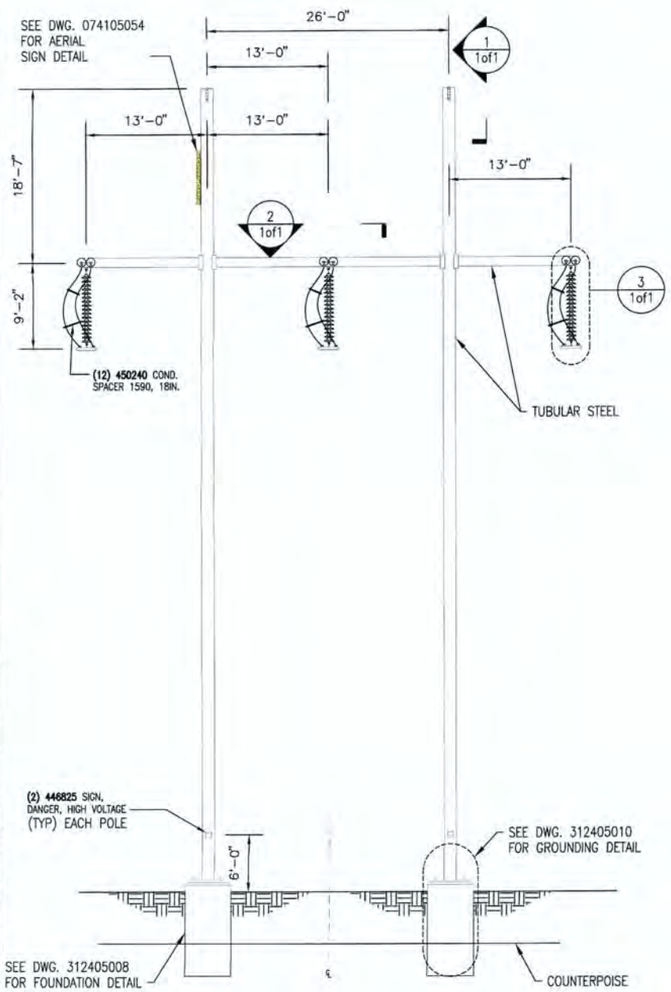

SEA- DEF ELEVATION

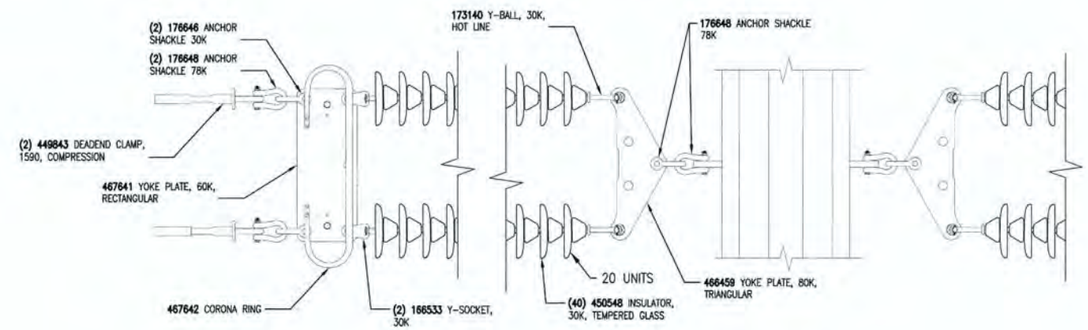

CONDUCTOR DETAIL (2)

SCALE: NTS 1of1

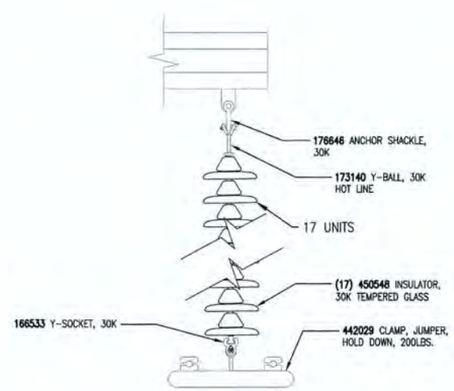

INSULATOR JUMPER DETAIL (3)

SCALE: NTS 1of1

STATE OF NEW HAMPSHIRE
GARRETT E. LUSZCZKI
No. 15003
LICENSED
PROFESSIONAL ENGINEER
12/19/2017

MATERIAL LIST

STOCK CODE	DESCRIPTION	QTY (EA UNLESS NOTED)
OPGW ATTACHMENT		
439345	CLAMP, DEAD END ASSEMBLY, OPGW, 0.648" TO 0.664", U-BOLT	4
414025	DAMPER, VIBRATION, SPIRAL, .564-.760", FOR FIBER	4
178982	CONNECTOR, GROUNDING, SERVIT POST, #2-2/0 STR. CU., (2-3/0 SOL.)	2
447387	GROUNDING LEAD, F/OPGW DE, 4', #4 CU, W/ LUG	4
176646	SHACKLE, ANCHOR, 5/8 IN., BOLT/NUT/KEY, GALV., SCREW PIN, 30,000 LBS	4
178548	CONNECTOR, COMPRESSION, #2-#6 TO #2-#6	2
GROUNDING		
178982	CONNECTOR, GROUNDING, SERVIT POST, #2-2/0 STR. CU., (2-3/0 SOL.)	4
446240	CONNECTOR, C-TAP, 3/#8 CW TO 3/#8 CW	8
177820	CABLE, BARE, COPPERWELD, 3/#8	100 FT
INSULATOR JUMPER ATTACHMENT		
450240	SPACER, BUNDLED CONDUCTOR, FOR 1590 54/19, 18 IN SPACING, HIGH TEMP	12
442029	CLAMP, JUMPER, HOLD DOWN, 200 LBS., 1590 ACSR	3
166533	CLEVIS, Y-SOCKET, 3/4 IN PIN, 30K, GALV. STEEL	3
450548	INSULATOR, GLASS, M&E RATED, 53-5, 10 IN., 30,000 LBS	51
173140	BALL, Y-CLEVIS, HOTLINE EXTENSION LINK, GALVANIZED STEEL, 30,000 LBS.	3
176646	SHACKLE, ANCHOR, 5/8 IN., BOLT/NUT/KEY, GALV., SCREW PIN, 30,000 LBS	3
CONDUCTOR ATTACHMENT		
449843	CLAMP, DEADEND, COMPRESSION, 1590 54/19 ACSR	12
176646	SHACKLE, ANCHOR, 5/8 IN., BOLT/NUT/KEY, GALV., SCREW PIN, 30,000 LBS	12
467641	PLATE, YOKE, RECTANGULAR, 60K	6
166533	CLEVIS, Y-SOCKET, 3/4 IN PIN, 30K, GALV. STEEL	12
450548	INSULATOR, GLASS, M&E RATED, 53-5, 10 IN., 30,000 LBS	240
173140	BALL, Y-CLEVIS, HOTLINE EXTENSION LINK, GALVANIZED STEEL, 30,000 LBS.	12
466459	PLATE, YOKE, DELTA, 80K, 1-1/4 IN HOLES	6
176648	SHACKLE, ANCHOR, GALV., 78K LBS, WITH1" BOLT	24
467642	CORONA RING	6
442780	COMPOUND, JOINT, ELECTRICAL, FILLER, STANDARD CAULKING GUN TUBE, 16 OZ., HIGH TEMP	8
SIGNAGE		
446825	SIGN, DANGER, HIGH VOLTAGE KEEP AWAY, ALUMINUM/POLYCARBONATE	2

CONTRACT SERVICES

REV	DESCRIPTION	ENG/PE#	DATE	DRN	CHKD	APPR
2	AS BUILT WO# T1318A1	GEL/15003	12/19/17	JJD	GEL	GEL
1	ISSUED FOR PROJECT RECORD	GEL/15003	12/15/17	JJD	BAF	GEL
0.1	RE-ISSUED FOR CONSTRUCTION	GEL/15003	5/5/17	JJD	BAF	GEL
0	ISSUED FOR CONSTRUCTION	GEL/15003	9/23/16	JJD	BAF	GEL
DWG REV	EPN/DESCRIPTION	CONT/PE#	DATE	DRN	CHKD	APPR

EVERSOURCE ENERGY

LINE 3124 345kV TRANSMISSION
SEA-DEF FRAMING DETAIL
STEEL POLE TANGENT DEADEND

T 2
DRAWN JJD/TRC
ENGINEER GEL/TRC
CHECKED CRP/TRC
APPROVED GEL/TRC
DATE 02/05/16

SCALE N.T.S.
FILE: 312405006.DWG
IMAGE:
DRAWING NO. 312405006

ES VER: 11/2015

12/19/2017 3:56 PM - jdoody - C:\pwworkingemp\pw1\jdoody\d1045458\312405006.dwg - SH.1

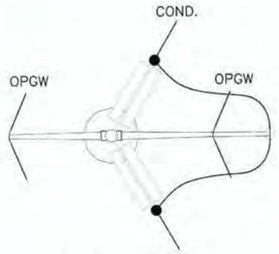

PLAN VIEW

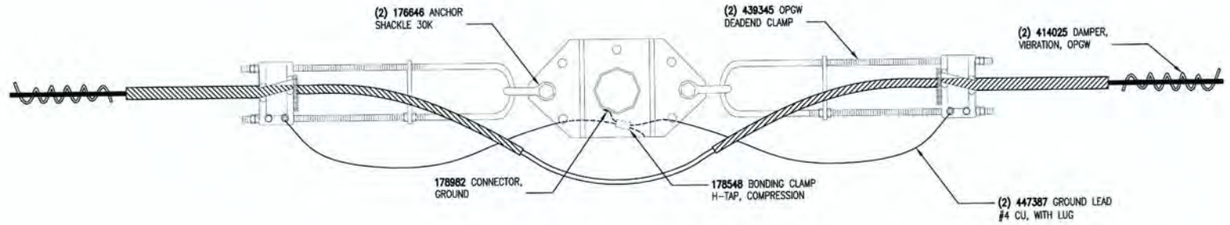

OPGW ATTACHMENT DETAIL (1)

SCALE: NTS 1of1

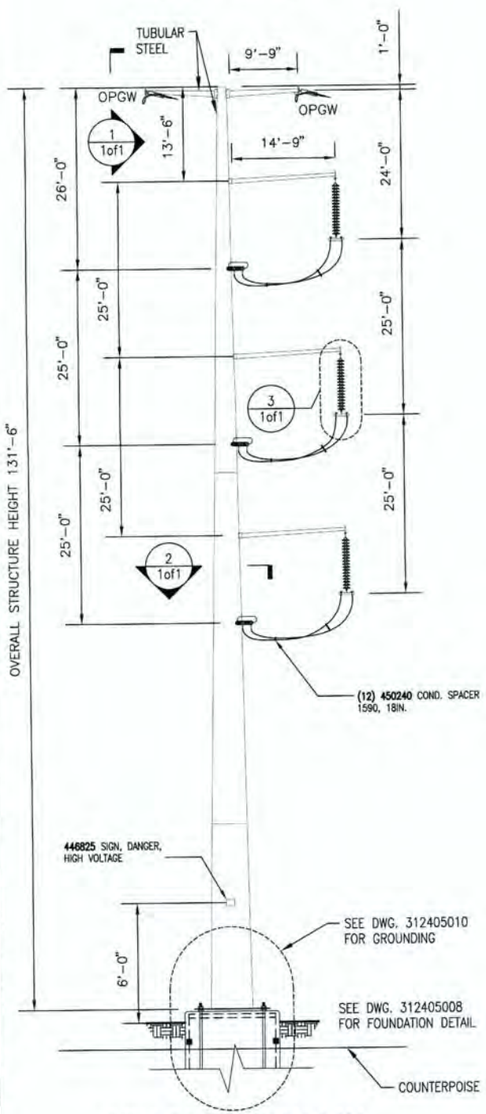

SEM-DEF ELEVATION

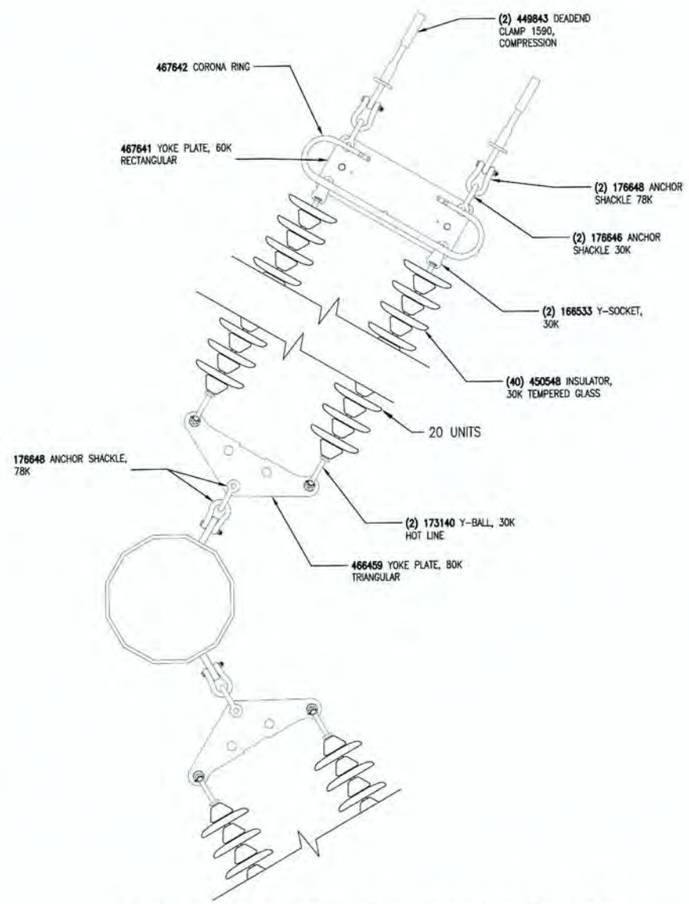

CONDUCTOR ATTACHMENT DETAIL (2)

SCALE: NTS 1of1

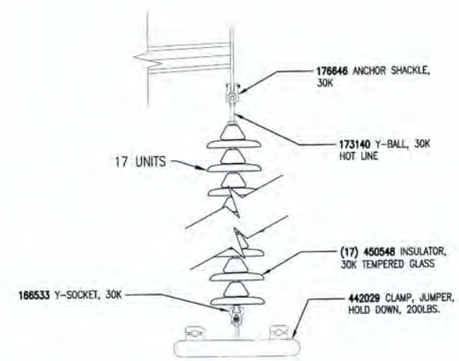

INSULATOR JUMPER DETAIL (3)

SCALE: NTS 1of1

MATERIAL LIST

STOCK CODE	DESCRIPTION	QTY (EA UNLESS NOTED)
OPGW ATTACHMENT		
439345	CLAMP, DEAD END ASSEMBLY, OPGW, 0.648" TO 0.664", U-BOLT	4
414025	DAMPER, VIBRATION, SPIRAL, .564-.760", FOR FIBER	4
178982	CONNECTOR, GROUNDING, SERVIT POST, #2-2/0 STR. CU., (2-3/0 SOL.)	2
447387	GROUNDING LEAD, F/OPGW DE, 4', #4 CU, W/ LUG	4
176646	SHACKLE, ANCHOR, 5/8 IN., BOLT/NUT/KEY, GALV., SCREW PIN, 30,000 LBS	4
178548	CONNECTOR, COMPRESSION, #2-#6 TO #2-#6	2
GROUNDING		
178982	CONNECTOR, GROUNDING, SERVIT POST, #2-2/0 STR. CU., (2-3/0 SOL.)	2
446240	CONNECTOR, C-TAP, 3#8 CW TO 3#8 CW	3
177820	CABLE, BARE, COPPERWELD, 3#8	105 FT
INSULATOR JUMPER ATTACHMENT		
450240	SPACER, BUNDLED CONDUCTOR, FOR 1590 54/19, 18 IN SPACING, HIGH TEMP	12
442029	CLAMP, JUMPER, HOLD DOWN, 200 LBS., 1590 ACSR	3
166533	CLEVIS, Y-SOCKET, 3/4 IN PIN, 30K, GALV. STEEL	3
450548	INSULATOR, GLASS, M&E RATED, 53-5, 10 IN., 30,000 LBS	51
173140	BALL, Y-CLEVIS, HOTLINE EXTENSION LINK, GALVANIZED STEEL, 30,000 LBS.	3
176646	SHACKLE, ANCHOR, 5/8 IN., BOLT/NUT/KEY, GALV., SCREW PIN, 30,000 LBS	3
CONDUCTOR ATTACHMENT		
449843	CLAMP, DEADEND, COMPRESSION, 1590 54/19 ACSR	12
176646	SHACKLE, ANCHOR, 5/8 IN., BOLT/NUT/KEY, GALV., SCREW PIN, 30,000 LBS	12
467641	PLATE, YOKE, RECTANGULAR, 60K	6
166533	CLEVIS, Y-SOCKET, 3/4 IN PIN, 30K, GALV. STEEL	12
450548	INSULATOR, GLASS, M&E RATED, 53-5, 10 IN., 30,000 LBS	240
173140	BALL, Y-CLEVIS, HOTLINE EXTENSION LINK, GALVANIZED STEEL, 30,000 LBS.	12
466459	PLATE, YOKE, DELTA, 80K, 1-1/4 IN HOLES	6
176648	SHACKLE, ANCHOR, GALV., 78K LBS, WITH1" BOLT	24
467642	CORONA RING	6
442780	COMPOUND, JOINT, ELECTRICAL, FILLER, STANDARD CAULKING GUN TUBE, 16 OZ., HIGH TEMP	8
SIGNAGE		
446825	SIGN, DANGER, HIGH VOLTAGE KEEP AWAY, ALUMINUM/POLYCARBONATE	1

STATE OF NEW HAMPSHIRE GARRETT E. LUSZCZKI No. 15003 LICENSED PROFESSIONAL ENGINEER
12/19/2017

CONTRACT SERVICES

REV	DESCRIPTION	ENG/PE#	DATE	DRN	CHKD	APPR
2	AS BUILT WO# T1318A1	GEL/15003	12/19/17	JJD	GEL	GEL
1	ISSUED FOR PROJECT RECORD	GEL/15003	12/15/17	JJD	BAF	GEL
0.1	RE-ISSUED FOR CONSTRUCTION	GEL/15003	3/3/17	JJD	BAF	GEL
0	ISSUED FOR CONSTRUCTION	GEL/15003	9/23/16	JJD	BAF	GEL
DWG REV	EPN/DESCRIPTION	CONT/PE#	DATE	DRN	CHKD	APPR

EVERSOURCE ENERGY

LINE 3124 345kV TRANSMISSION
SEM-DEF FRAMING DETAIL
STEEL MONOPOLE DEADEND ANGLE

T 2
DRAWN JJD/TRC
ENGINEER GEL/TRC
CHECKED CRP/TRC
APPROVED GEL/TRC
DATE 02/05/16

SCALE N.T.S.
FILE: 312405007.DWG
IMAGE:
DRAWING NO. 312405007

ES VER: 11/2015

12/19/2017 3:57 PM - jdoody - C:\pwworking\eprl\jdoody\d1045458\312405007.dwg - 11X17

ES VER: 11/2015

STRUCTURE						FOUNDATION										ANCHOR BOLT ASSEMBLY							
						FOUNDATION DIMENSIONS					FOUNDATION REINFORCEMENT		FACTORED FOUNDATION LOADS										
STRUCTURE NUMBER	STRUCTURE TYPE	# OF FOUNDATIONS NEEDED	SPACING (FT)	DEFLECTION ANGLE Ø	BORING NUMBER	APPROX. TOP OF FDN. ELEV. (FT.)	REVEAL (FT.)	DIA. (FT.)	ROCK SOCKET LENGTH (FT.)	TOTAL LENGTH (FT.)	LONGITUDINAL REINF.	BUNDLED VERTICAL BARS	VERTICAL (KIPS)	SHEAR (KIPS)	MOMENT (KIP*FT)	NUMBER OF ANCHOR BOLTS	ANCHOR BOLT DIA. (IN.)	BOLT CIRCLE (IN.)	ANCHOR BOLT LENGTH (IN.)	ANCHOR BOLT PROJ. (IN.)	ANCHOR BOLT SUPPLIER	ANCHOR BOLT DRAWING NO.	COMMENTS
STR. 1	SEA-DEF	2	26	1.1	B-2	354	1	7	7.5	21.5	32-#11	NO	42.5	36.9	3,750	12	2.25	58.3	117	12	VALMONT	1061056	FINAL
STR. 2	SEM-DEF	1	N/A	55.2	B-287	328	3	10	7.5	33	84-#11	YES (2) PER	77.1	137.2	11,750	28	2.25	75	132	12	VALMONT	1061057	FINAL
STR. 25	SEA-DEF	2	26	31.1	B-264	351	1	8	5.5	17	44-#11	NO	52.3	72.1	6,055	20	2.25	66.0	114	12	VALMONT	1061058	FINAL

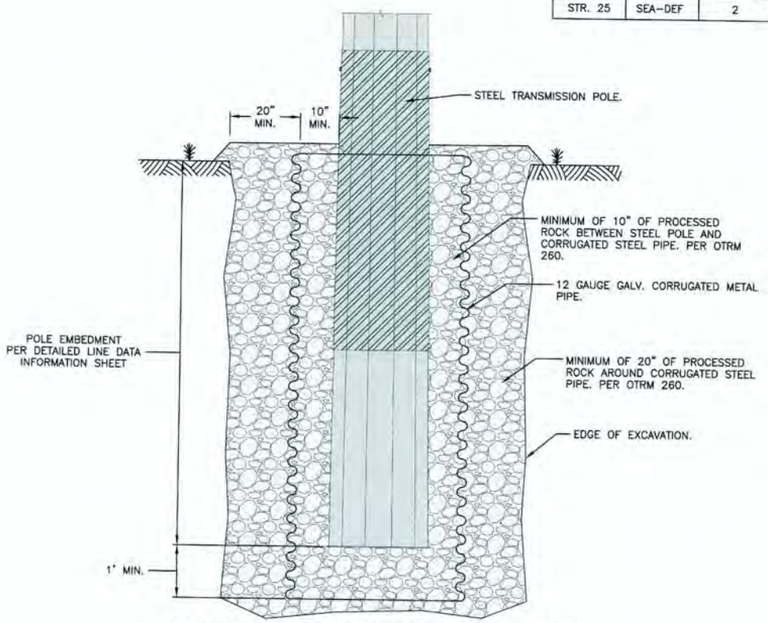

DIRECT EMBEDDED FOUNDATION

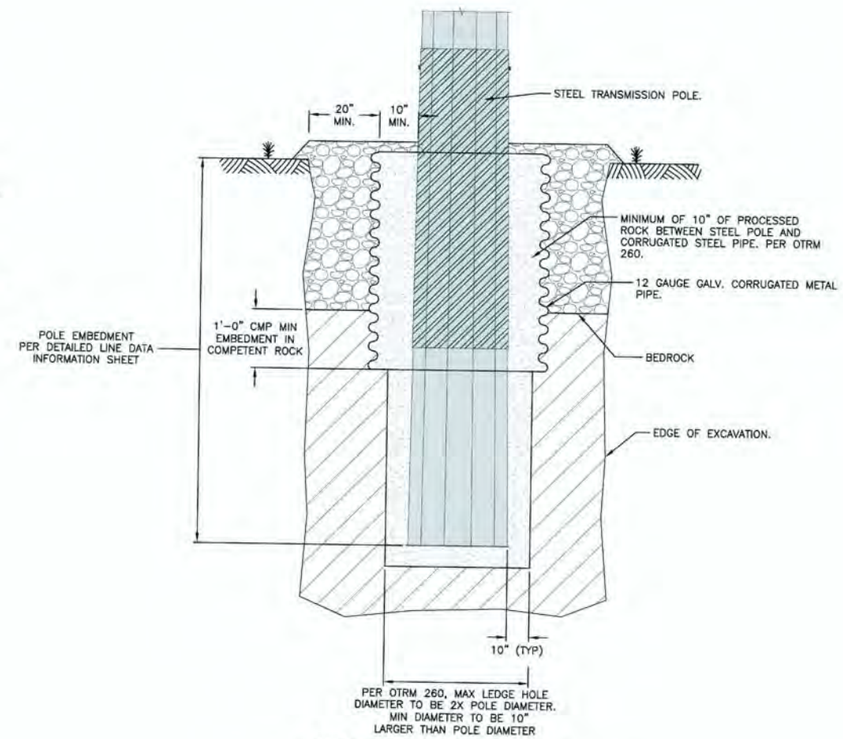

ROCK FOUNDATION

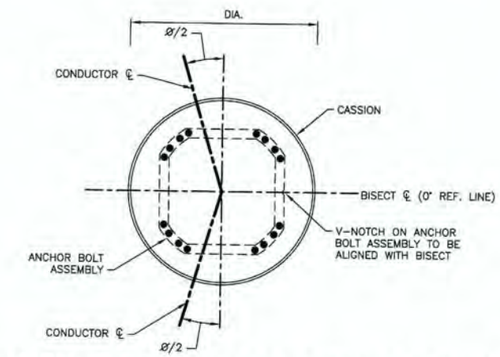

ANCHOR BOLT ASSEMBLY ORIENTATION

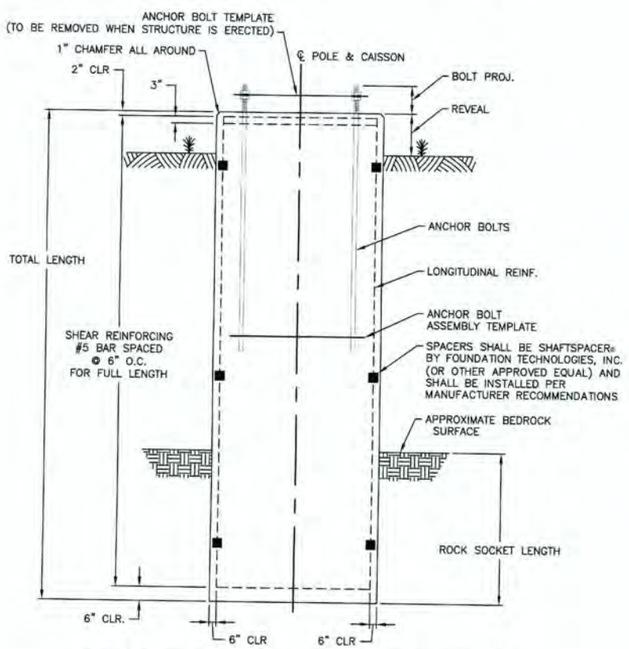

CONCRETE CAISSON FOUNDATION

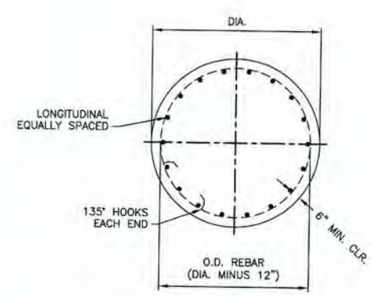

CONCRETE CAISSON REINFORCEMENT

STATE OF NEW HAMPSHIRE
GARRETT E. LUISZCZKI
No. 15003
LICENSED
PROFESSIONAL ENGINEER
12/19/2017

GENERAL NOTES

1. FOUNDATION SURVEY AND STAKING TO BE PERFORMED BY EVERSOURCE.
2. CONTRACTOR SHALL FIELD VERIFY TOP OF FOUNDATION ELEVATION.
3. STR. 1 BORING INFORMATION ESTIMATED BASED ON 9/11/2014 BORING AT SCOBIE POND 345kV S/S (OTHER WORK). BORINGS FOR STR 2 AND 25 COMPLETED AS PART OF THIS WORK.
4. FACTORED LOADS INCLUDE NESC AND OTRM LOAD FACTORS.
5. CONTRACTOR SHALL CONTACT ENGINEERING IF BEDROCK IS ENCOUNTERED AT A DIFFERENT DEPTH THAN WHAT IS LISTED IN THE TABLE ABOVE. CONTRACTOR SHALL CONTACT ENGINEERING BEFORE DRILLING IS FINISHED AND THE FOUNDATION IS INSTALLED.
6. CONTRACTOR SHALL MATCH UP ANCHOR BOLT CAGE AND BASEPLATE PRIOR TO CASTING IN FOUNDATION TO CONFIRM FITMENT.

CONCRETE NOTES

1. FOUNDATION CONCRETE WORK SHALL BE PER EVERSOURCE STANDARD OTRM 051 (TRANSMISSION LINE AND SUBSTATION TERMINAL STRUCTURE & LIGHTNING MAST FOUNDATIONS), LATEST REVISION AND EVERSOURCE CONSTRUCTION STANDARD OTRM 251 (TRANSMISSION LINE SUBSTATION TERMINAL STRUCTURE, AND LIGHTNING MAST FOUNDATIONS).
2. 1" NOMINAL CHAMFER ON ALL EXPOSED CONCRETE EDGES.
3. CONCRETE SHALL HAVE A 28 DAY COMPRESSIVE STRENGTH OF 5000 PSI.
4. MAX AGGREGATE SIZE SHALL BE 3/4".
5. CONCRETE SHALL HAVE A MAXIMUM OF 4" SLUMP.
6. CONCRETE SHALL HAVE BETWEEN 5% AND 7% AIR ENTRAINMENT.

REINFORCEMENT NOTES

1. REINFORCING TO BE ASTM A615 GRADE 60 (60KSI YIELD STRENGTH).
2. WELDING OF REINFORCING IS PROHIBITED.
3. ANCHOR BOLTS TO BE PROVIDED AS AN ASSEMBLY BY THE STEEL POLE VENDOR.
4. SHEAR TIE END HOOKS SHALL HOOK AROUND LONGITUDINAL BARS THAT ARE SEPARATED BY AT LEAST ONE (1) LONGITUDINAL BAR.
5. SHEAR TIE END HOOKS SHALL BE STAGGERED BY AT LEAST 90° FROM ADJACENT SHEAR TIES FOLLOWING A PATTERN OF: 0°-180°-270°-90°
6. SHEAR TIE HOOKS SHALL BE BENT WITH A RADIUS OF SIX (6) TIMES THE SHEAR TIE DIAMETER. FOR #5 SHEAR TIES THE MINIMUM BEND RADIUS IS EQUAL TO 6x⅝"=3-¾".
7. ANY MECHANICAL SPLICES SPLICES MUST BE APPROVED ICBO TYPE 2 SEISMIC SPLICES.
8. IF MECHANICAL SPLICES ARE NOT USED THEN A MINIMUM OF 9'-0" LAP LENGTHS ARE REQUIRED FOR LONGITUDINAL REINFORCING.
9. LONGITUDINAL REINFORCING SPLICES SHALL BE PLACED BELOW THE MIDPOINT OF THE FOUNDATION.
10. SPLICES IN LONGITUDINAL REBAR SHALL BE STAGGERED BY A MINIMUM OF 5'-0".

CONTRACT SERVICES

REV	DESCRIPTION	ENG/PE#	DATE	DRN	CHKD	APPR
2	AS BUILT WO# T1318A1	GEL/15003	12/19/17	JJD	GEL	GEL
1	ISSUED FOR PROJECT RECORD	GEL/15003	12/15/17	JJD	BAF	GEL
0	ISSUED FOR CONSTRUCTION	GEL/15003	9/23/16	JJD	BAF	GEL
DWG REV	EPN/DESCRIPTION	CONT/PE#	DATE	DRN	CHKD	APPR

EVERSOURCE ENERGY

LINE 3124 345kV TRANSMISSION FOUNDATION DETAIL

T / 2	
DRAWN	JJD/TRC
ENGINEER	GEL/TRC
CHECKED	CRP/TRC
APPROVED	GEL/TRC
DATE	02/05/16
SCALE	N.T.S.
FILE: 312405008.DWG	
IMAGE:	
DRAWING NO.	312405008

12/19/2017 3:57 PM - jdoody - C:\pwworking\eme1\jdoody\d1045458\312405008.dwg - 11X17

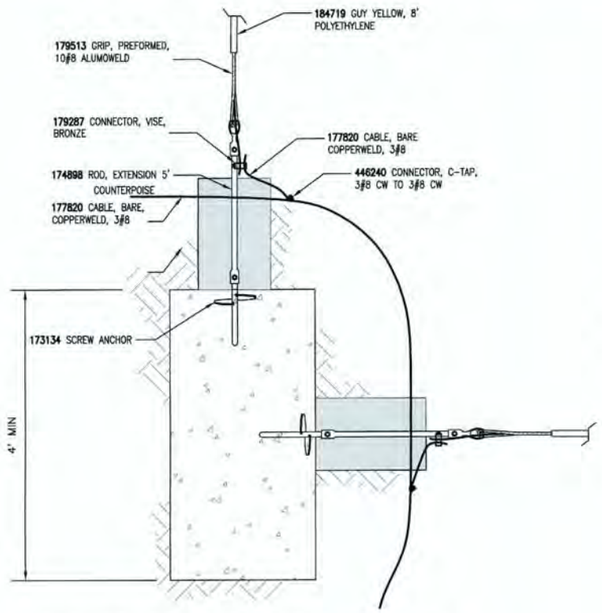

SHARED HELICAL ANCHOR PLAN VIEW

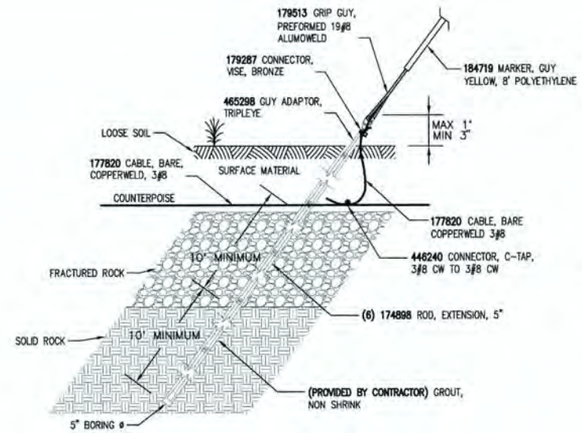

ROCK ANCHOR

NOTE:
EACH ROCK ANCHOR SHALL BE TESTED TO THE FULL RATED BREAKING STRENGTH OF THE GUY WIRE (43 KIPS) PER THE CONSTRUCTION SPECIFICATION.

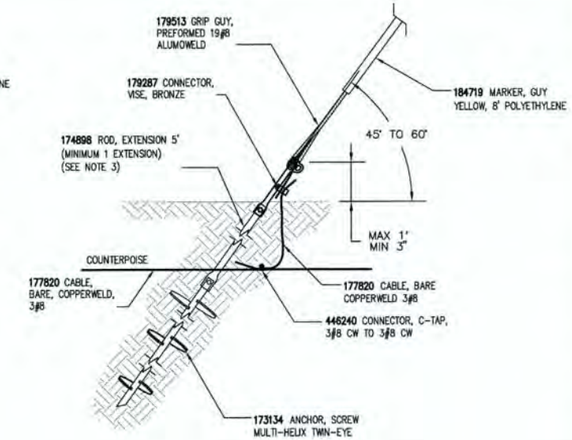

HELICAL ANCHOR

MATERIAL LIST		
STOCK CODE	DESRIPTION	QTY (EA UNLESS NOTED)
ROCK ANCHOR		
174898	ROD, EXTENSION, 5' X 1.5" X 1.5"	6
465298	GUY ADAPTER, TRIPLEYE, WITH BOLT AND NUT, WITH PULLING EYE	1
184719	MARKER, GUY, YELLOW, 8' POLYETHYLENE, 3/16 IN TO 3/4 IN GUY WIRE	1
179287	SPEAR-HEAD, VICE-TYPE CONNECTOR	1
MULTI-HELIX ANCHOR		
174898	ROD, EXTENSION, 5' X 1.5" X 1.5"	1
173134	ANCHOR, SCREW, TRIPLE HELIX, 10"-12"-14", TWINEYE	1
184719	MARKER, GUY, YELLOW, 8' POLYETHYLENE, 3/16 IN TO 3/4 IN GUY WIRE	1
179287	SPEAR-HEAD, VICE-TYPE CONNECTOR	1
PRECAST CONCRETE ANCHOR		
464339	ANCHOR, BLOCK, PRECAST CONCRETE (50K)	1
464597	NUT, OVAL EYE, 1'	1
176648	SHACKLE, ANCHOR, GALV., 78K LBS, WITH1" BOLT	1
466395	ROD, ANCHOR, GALV. STEEL, 1 IN DIA., HS, 7 FT LONG, 50K, THREADED	2
174760	COUPLING, ROD, ANCHOR, 1 IN ROD, 50K	1
466396	NUT, TRIPLEYE, GALV. STEEL, HS, 1 IN ROD, 50K	1
184719	MARKER, GUY, YELLOW, 8' POLYETHYLENE, 3/16 IN TO 3/4 IN GUY WIRE	1
179287	SPEAR-HEAD, VICE-TYPE CONNECTOR	1
SHARED ANCHOR		
174898	ROD, EXTENSION, 5' X 1.5" X 1.5"	2
173134	ANCHOR, SCREW, TRIPLE HELIX, 10"-12"-14", TWINEYE	2
176648	SHACKLE, ANCHOR, GALV., 78K LBS, WITH1" BOLT	2
437024	ROLLER, GUY, FOR 19#10	1
179513	GRIP, PREFORMED, 19#8 AW	2
177611	FT. CABLE, BARE, #8 ALUMOWELD, 19 STRAND, ALUMINUM	85 FT
184719	MARKER, GUY, YELLOW, 8' POLYETHYLENE, 3/16 IN TO 3/4 IN GUY WIRE	2
179287	SPEAR-HEAD, VICE-TYPE CONNECTOR	2
446240	CONNECTOR, C-TAP, 3#8 CW TO 3#8 CW	1
177820	CABLE, BARE, COPPERWELD, 3#8	4

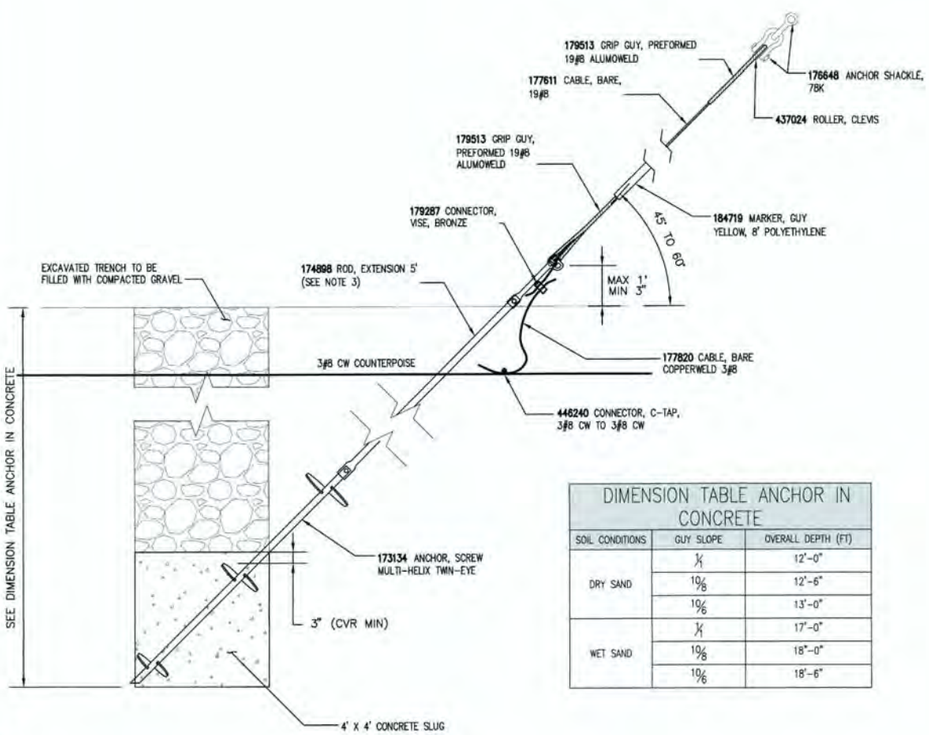

DIMENSION TABLE ANCHOR IN CONCRETE		
SOIL CONDITIONS	GUY SLOPE	OVERALL DEPTH (FT)
DRY SAND	1/1	12'-0"
	10/8	12'-6"
	10/6	13'-0"
WET SAND	1/1	17'-0"
	10/8	18'-0"
	10/6	18'-6"

SHARED HELICAL ANCHOR PROFILE VIEW

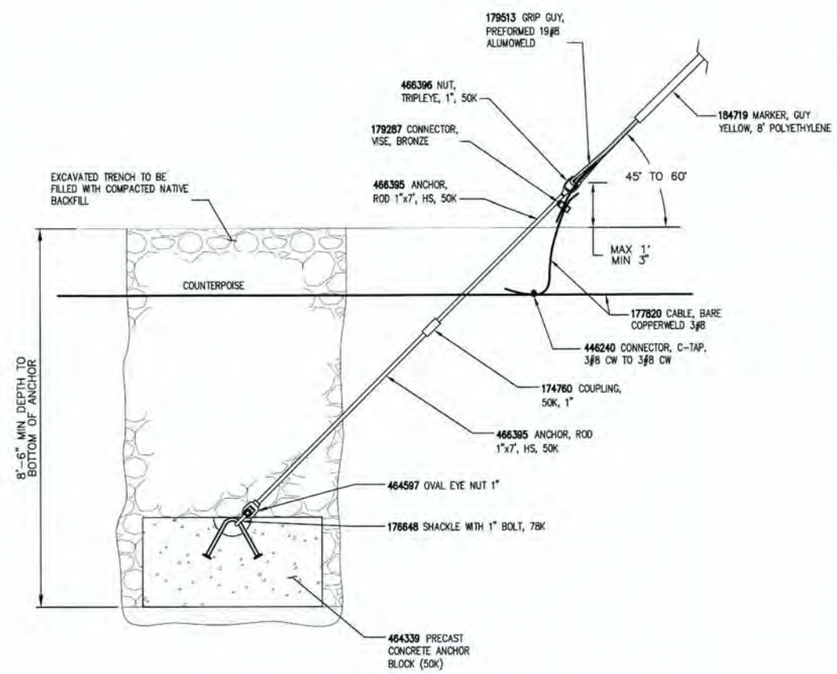

PRECAST CONCRETE ANCHOR

NOTES:
1. REPLACE EXISTING GUY FROM STRUCTURE 75 ON LINE X116 WITH 19#8 AW GUY WIRE AS SHOWN.
2. GROUNDING CONNECTORS AND WIRES FOR UNINSULATED GUYS ONLY. GUY WIRES WITH FIBERGLASS INSULATING RODS WILL NOT BE TIED TO COUNTERPOISE.
3. INSTALL EXTENSION RODS ON MULTIPLE HELIX ANCHOR UNTIL THE MANUFACTURER'S PRESCRIBED TORQUE IS ACHIEVED.
4. NON-SHRINK GROUT AND 5KSI CONCRETE TO BE PROVIDED BY CONTRACTOR.

STATE OF NEW HAMPSHIRE
GARRETT E. LUSZCZKI
No. 15003
LICENSED
PROFESSIONAL ENGINEER
12/19/2017

CONTRACT SERVICES

REV	DESCRIPTION	ENG/PE#	DATE	DRN	CHKD	APPR
2	AS BUILT W/# T1318A1	GEL/15003	12/19/17	JJD	GEL	GEL
1	ISSUED FOR PROJECT RECORD	GEL/15003	12/15/17	JJD	BAF	GEL
0	ISSUED FOR CONSTRUCTION	GEL/15003	9/23/16	JJD	BAF	GEL
DWG REV	EPN/DESCRIPTION	CONT/PE#	DATE	DRN	CHKD	APPR

EVERSOURCE ENERGY

LINE 3124 345kV TRANSMISSION
GUYING DETAILS

T 2
DRAWN JJD/TRC
ENGINEER GEL/TRC
CHECKED CRP/TRC
APPROVED GEL/TRC
DATE 02/05/16
SCALE N.T.S.
FILE: 312405009.DWG
IMAGE:
DRAWING NO. 312405009

ES VER: 11/2015

12/19/2017 3:58 PM - jdoody - C:\pwworking\prp1\jdoody\d1045458\312405009.dwg - 11X17

ES VER: 11/2015

MATERIAL LIST			
STOCK CODE	DESCRIPTION	QTY (EA UNLESS NOTED) 3-POLE STR.	2-POLE STR.
GROUNDING			
178982	CONNECTOR, GROUNDING, SERVIT POST, #2-2/0 STR. CU., (2-3/0 SOL.)	6	4
175364	ROD, CW, GROUNDING, 5/8" DIA., 8' LENGTH	12	8
445352	CONNECTOR, GROUND ROD TO 2/0 CU	12	8
446240	CONNECTOR, C-TAP, 3#8 CW TO 3#8 CW	24	14
177820	CABLE, BARE, COPPERWELD, 3#8	315 FT	210 FT
137613	CONNECTOR, GROUNDING, 3#8 CWLD TO FLAT	6	4

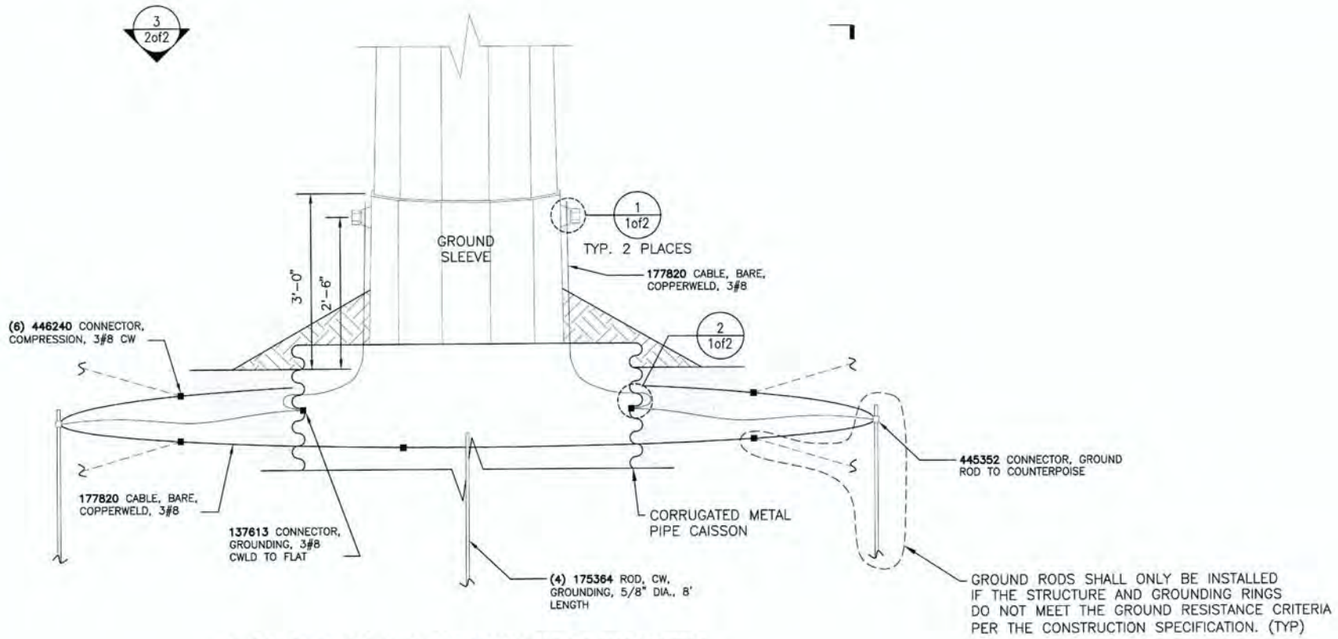

SINGLE POLE GROUNDING ELEVATION

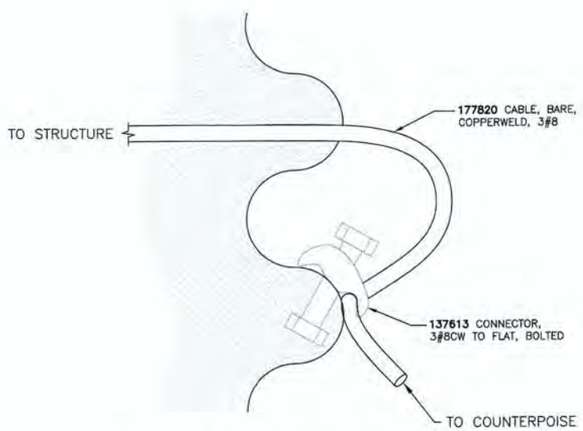

CAISSON BOND DETAIL (2)

SCALE: NTS 1of2

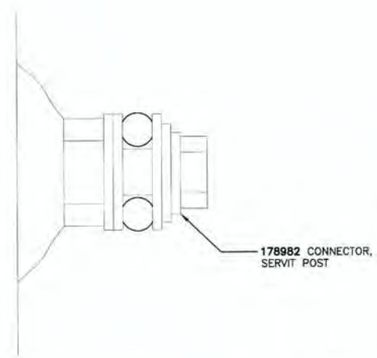

GROUNDING NUT DETAIL (1)

SCALE: NTS 1of2

NOTES:
1. SEE NU STANDARD DRAWING 09000-60000 FOR ADDITIONAL DETAILS REGARDING FOUNDATION DESIGN, INSTALLATION AND BONDING
2. DETAIL 2 IS NOT REQUIRED FOR CONCRETE CAISSON FOUNDATION

STATE OF NEW HAMPSHIRE GARRETT E. LUSZCZKI No. 15003 LICENSED PROFESSIONAL ENGINEER
12/19/2017

CONTRACT SERVICES							
REV	DESCRIPTION	ENG/PE#	DATE	DRN	CHKD	APPR	
2	AS BUILT WO# T131BA1	GEL/15003	12/19/17	JJD	GEL	GEL	
1	ISSUED FOR PROJECT RECORD	GEL/15003	12/15/17	JJD	BAF	GEL	
0	ISSUED FOR CONSTRUCTION	GEL/15003	9/23/16	JJD	BAF	GEL	
DWG REV	EPN/DESCRIPTION	CONT/PE#	DATE	DRN	CHKD	APPR	

EVERSOURCE ENERGY

LINE 3124 345kV TRANSMISSION
GROUNDING DETAIL

SHEET 1

T	2
DRAWN	JJD/TRC
ENGINEER	GEL/TRC
CHECKED	CRP/TRC
APPROVED	GEL/TRC
DATE	02/05/16
SCALE	N.T.S.
FILE: 312405010.DWG	
IMAGE:	
DRAWING NO.	312405010

12/19/2017 4:00 PM - jdoody - C:\pwworking\emp\pw1\jdoody\d1045458\312405010.dwg - Sh1

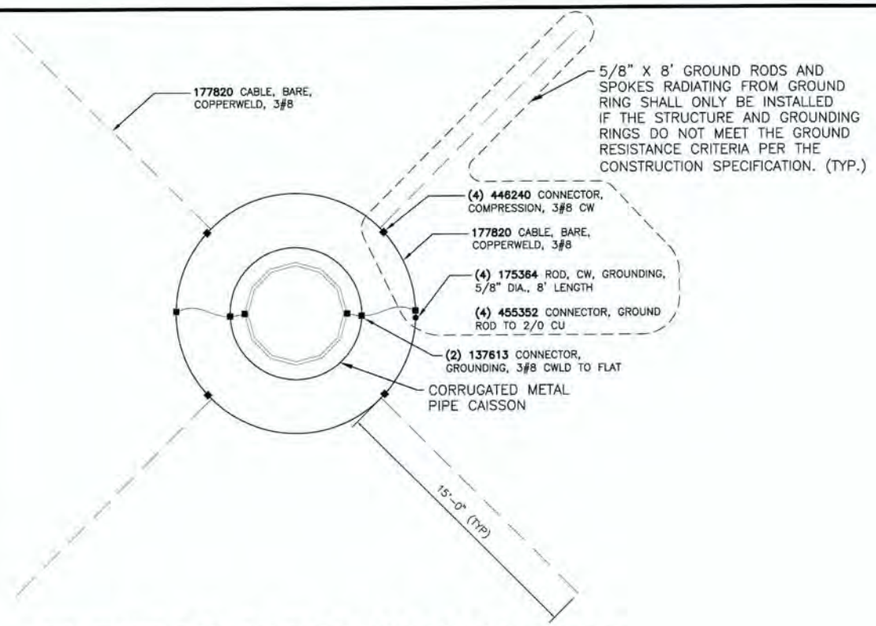

1-POLE STR GROUNDING DETAIL PLAN VIEW (3)

SCALE: NTS 1of2

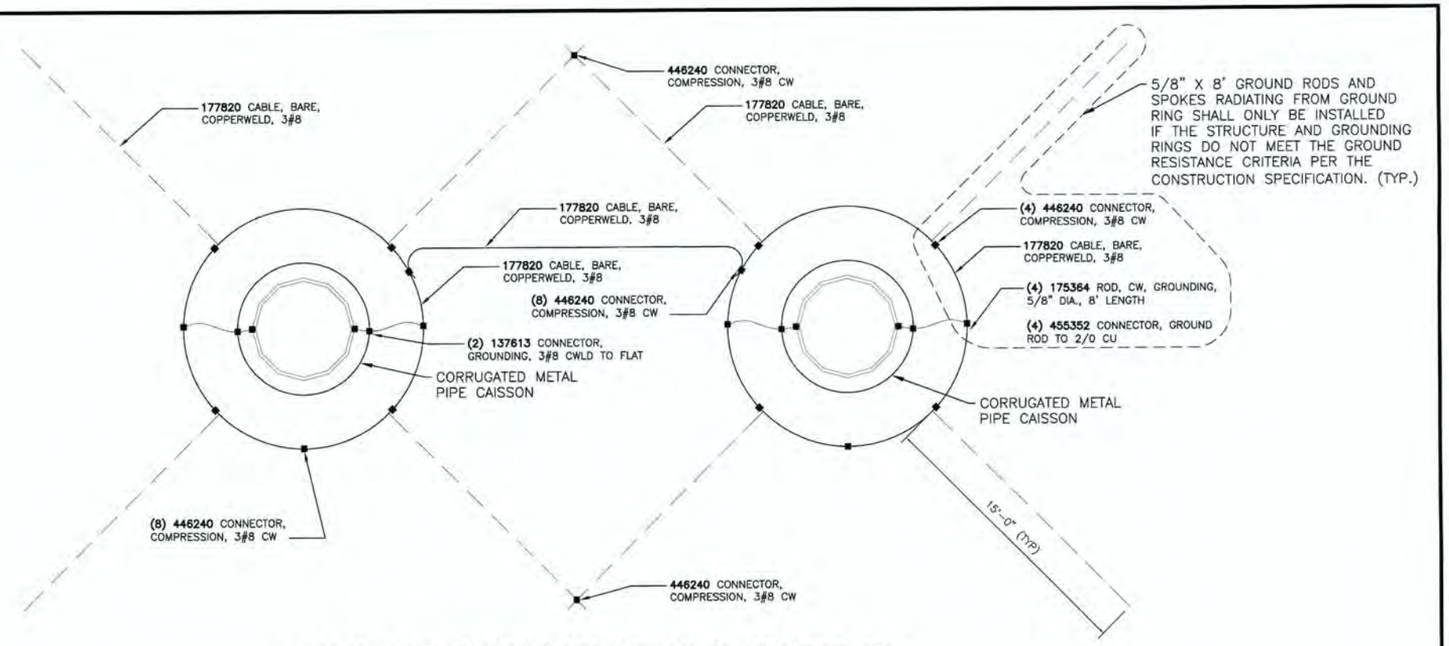

2-POLE STR GROUNDING DETAIL PLAN VIEW (4)

SCALE: NTS 1of2

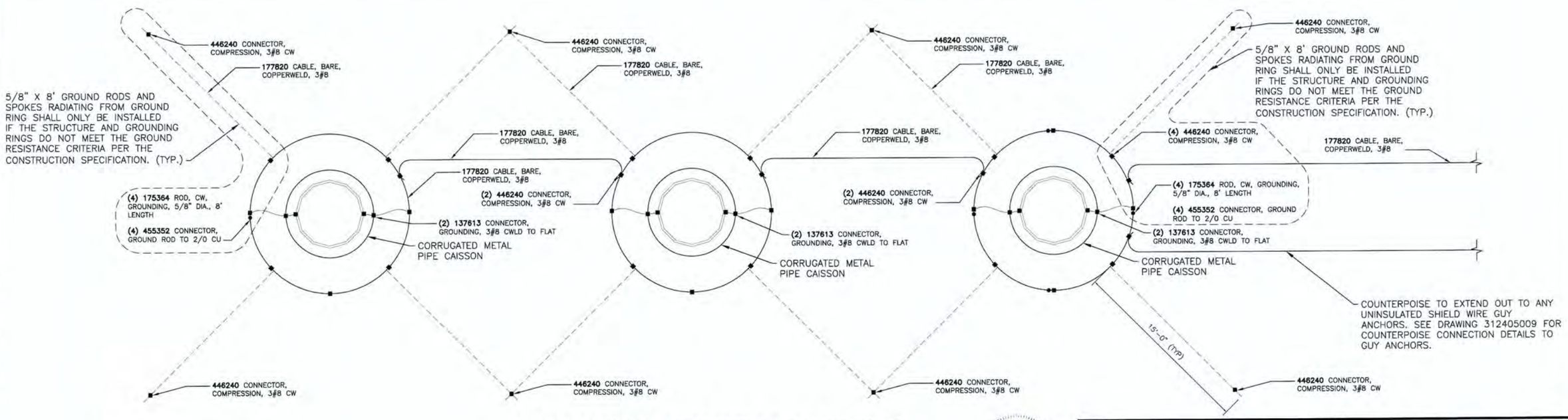

3-POLE STR GROUNDING DETAIL PLAN VIEW (5)

SCALE: NTS 1of2

STATE OF NEW HAMPSHIRE — GARRETT E. LUSZCZKI No. 15003 — LICENSED PROFESSIONAL ENGINEER — 12/19/2017

REV	DESCRIPTION	ENG/PE#	DATE	DRN	CHKD	APPR
2	AS BUILT WO# T1318A1	GEL/15003	12/19/17	JJD	GEL	GEL
1	ISSUED FOR PROJECT RECORD	GEL/15003	12/15/17	JJD	BAF	GEL
0	ISSUED FOR CONSTRUCTION	GEL/15003	9/23/16	JJD	BAF	GEL
DWG REV	EPN/DESCRIPTION	CONT/PE#	DATE	DRN	CHKD	APPR

CONTRACT SERVICES

EVERSOURCE ENERGY

LINE 3124 345kV TRANSMISSION GROUNDING DETAIL

SHEET 2

T 2

DRAWN: JJD/TRC
ENGINEER: GEL/TRC
CHECKED: CRP/TRC
APPROVED: GEL/TRC
DATE: 02/05/16

SCALE: N.T.S.
FILE: 312405010.DWG
MADE:
DRAWING NO. 312405010

ES VER: 11/2015

12/19/2017 4:00 PM – jdoody – C:\pwworkingemp\pw1\jdoody\d1045458\312405010.dwg – Sh.2

ES VER. 11/2015

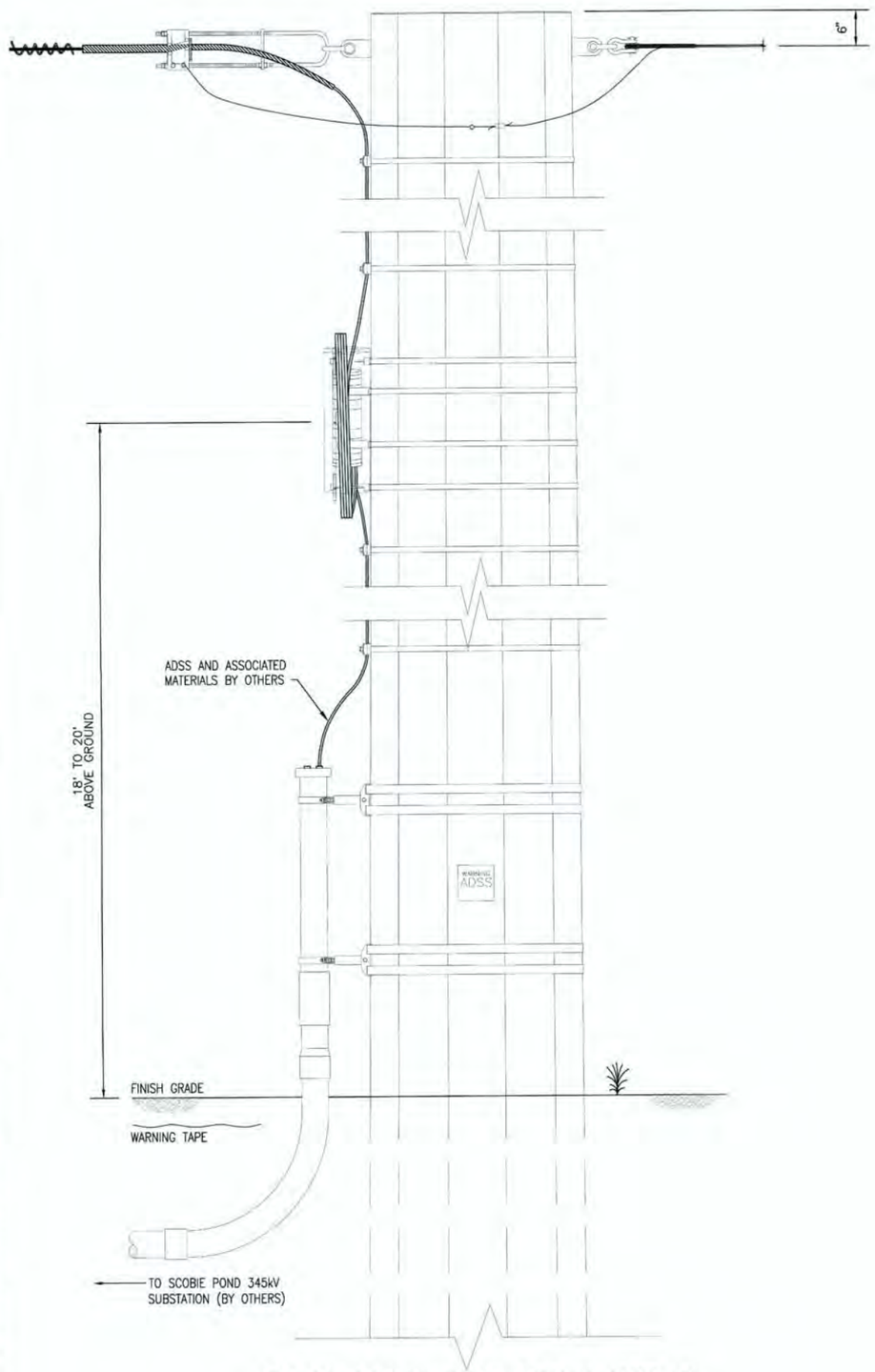

OPGW TERMINATION DETAIL (STR. 1)

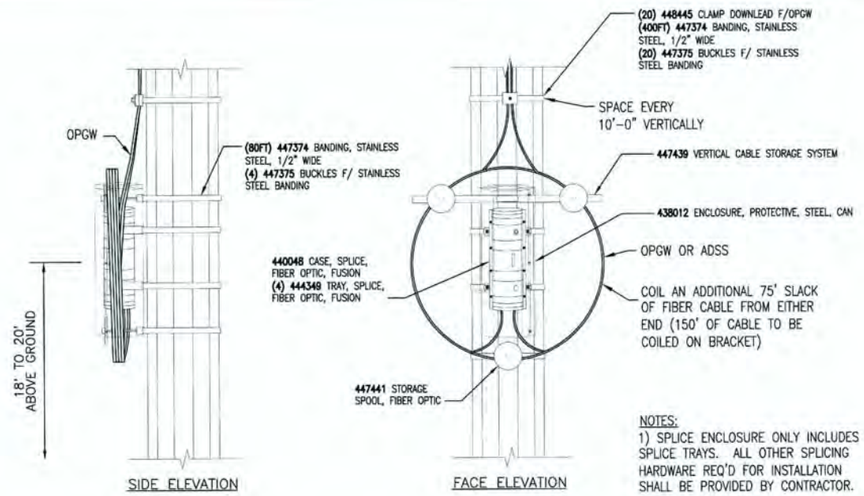

NOTES:
1) SPLICE ENCLOSURE ONLY INCLUDES SPLICE TRAYS. ALL OTHER SPLICING HARDWARE REQ'D FOR INSTALLATION SHALL BE PROVIDED BY CONTRACTOR.

FOD1 (STEEL POLE SPLICE LOCATION)

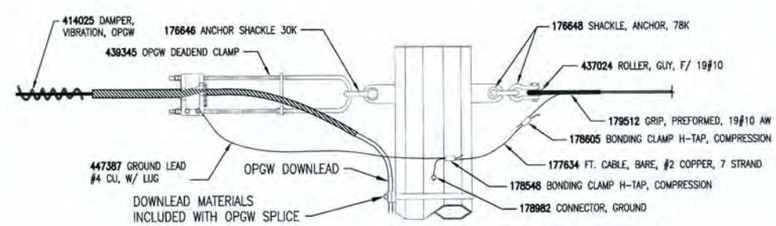

FOD 2 (OPGW TO OHSW DEADEND)

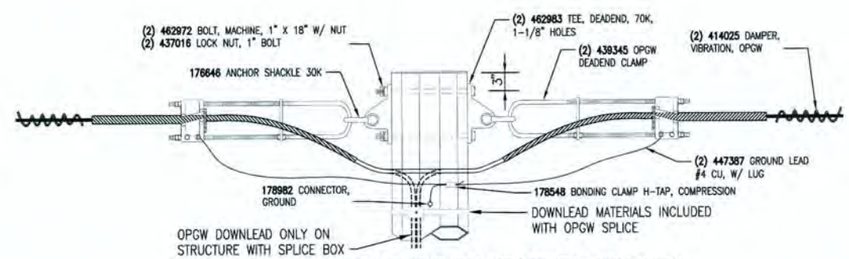

FOD3 (STEEL POLE OPGW TAN DEADEND)

NOTES:
1. THE BRIDLE CABLE ASSEMBLY ON THE SEA-HF STRUCTURES WILL NEED TO BE VERTICALLY OFFSET SO AS NOT TO INTERFERE WITH BOLT ELEVATIONS WHEN USING THIS INLINE OPGW DEADEND ASSEMBLY.
2. WHEN USING THIS ASSEMBLY USE 7/8" HARDWARE FOR BRIDLE GUY DEADEND TEES:

(2) 174380 7/8" X 14" MACHINE BOLT

(2) 175078 NUT, LOCK, FOR 7/8" BOLT

(2) 177042 WASHER, SQ., 4", FOR 7/8" BOLT

STATE OF NEW HAMPSHIRE
GARRETT E. LUSZCZKI
No. 15003
LICENSED
PROFESSIONAL ENGINEER
12/19/2017

MATERIAL LIST

STOCK CODE	DESCRIPTION	QTY (EA UNLESS NOTED)
FOD1 (STEEL POLE SPLICE LOCATION)		
440048	CASE, SPLICE, FIBER OPTIC, FUSION	1
447439	VERTICAL CABLE STORAGE SYSTEM	1
448445	CLAMP DOWNLEAD FOR OPGW, .610"-.656" DIAM. FOR POLE BAND	20
438012	ENCLOSURE, PROTECTIVE, STEEL, CAN	1
444349	TRAY, SPLICE, FIBER OPTIC, FUSION	4
447441	STORAGE SPOOL, FIBER OPTIC	1
447374	BANDING, STAINLESS STEEL, 1/2" WIDE	480 FT
447375	BUCKLES FOR STAINLESS STEEL BANDING	24
FOD 2 (OPGW TO OHSW DE)		
439345	CLAMP, DEAD END ASSEMBLY, OPGW, 0.648" TO 0.664", U-BOLT	1
414025	DAMPER, VIBRATION, SPIRAL, .564-.760", FOR FIBER	1
447387	GROUNDING LEAD, F/OPGW DE, 4', #4 CU, W/ LUG	1
176646	SHACKLE, ANCHOR, 5/8 IN., BOLT/NUT/KEY, GALV., SCREW PIN, 30,000 LBS	1
437024	ROLLER, GUY, FOR 19#10	1
179512	GRIP, PREFORMED, 19#10 AW	1
177634	FT. CABLE, BARE, #2 COPPER, 7 STRAND	4 FT
178605	CONNECTOR, COMPRESSION, 19#10 AW TO #4 CU	1
176648	SHACKLE, ANCHOR, GALV., 78K LBS, WITH1" BOLT	2
178548	CONNECTOR, COMPRESSION, #2-#6 TO #2-#6	1
178982	CONNECTOR, GROUNDING, SERVIT POST, #2-2/0 STR. CU., (2-3/0 SOL.)	1
FOD3 (STEEL POLE OPGW TAN DE)		
176646	SHACKLE, ANCHOR, 5/8 IN., BOLT/NUT/KEY, GALV., SCREW PIN, 30,000 LBS	2
439345	CLAMP, DEAD END ASSEMBLY, OPGW, 0.648" TO 0.664", U-BOLT	2
447387	GROUNDING LEAD, F/OPGW DE, 4', #4 CU, W/ LUG	2
462983	TEE, DEADEND, HEAVY DUTY, 70K, 1-1/8 IN STEM HOLE, 1-1/8 IN MTG HOLE	2
462972	BOLT, MACHINE, 1 IN, 18 IN OAL, 6 IN MIN THRD, STEEL, GALVANIZED, ANSI A325-1998 TYPE 3, HEX HEAD AND NUT	2
437016	NUT, LOCKING, 1 IN	2
178548	CONNECTOR, COMPRESSION, #2-#6 TO #2-#6	1
178982	CONNECTOR, GROUNDING, SERVIT POST, #2-2/0 STR. CU., (2-3/0 SOL.)	1
414025	DAMPER, VIBRATION , SPIRAL, .564-.760", FOR FIBER	2
174380	BOLT, MACHINE, 7/8" X 14" WITH NUT	2
175078	NUT, LOCK, MF, FOR 7/8" BOLT	2
177042	WASHER, SQUARE, 4" FLAT FOR 7/8" BOLT	2

CONTRACT SERVICES

REV	DESCRIPTION	ENG/PE#	DATE	DRN	CHKD	APPR
2	AS BUILT WO# T1318A1	GEL/15003	12/19/17	JJD	GEL	GEL
1	ISSUED FOR PROJECT RECORD	GEL/15003	12/15/17	JJD	BAF	GEL
0	ISSUED FOR CONSTRUCTION	GEL/15003	9/23/16	JJD	BAF	GEL
DWG REV	EPN/DESCRIPTION	CONT/PE#	DATE	DRN	CHKD	APPR

EVERSOURCE ENERGY

LINE 3124 345kV TRANSMISSION
OPGW DETAILS

T 2
DRAWN RDW/TRC
ENGINEER GEL/TRC
CHECKED CRP/TRC
APPROVED GEL/TRC
DATE 02/05/16

SCALE N.T.S.
FILE: 312405011.DWG
IMAGE:
DRAWING NO. 312405011

12/19/2017 4:01 PM - jdoody - C:\pwworking\eprp\pw1\jdoody\d1045458\312405011.dwg - 11X17

ES VER: 11/2015

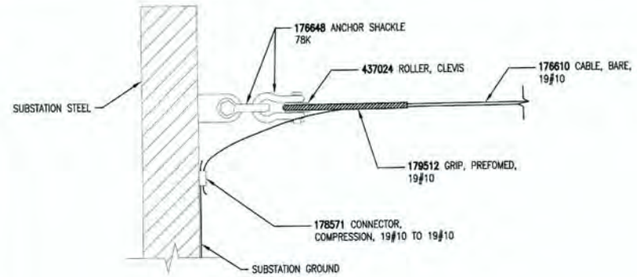

TERM-SW-1 (SCOBIE POND 345kV S/S)

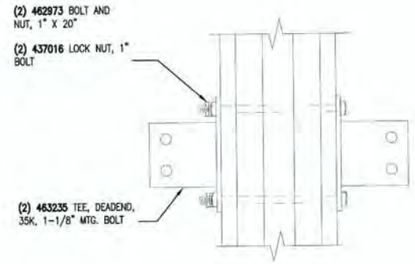

WORKING VANG

TO BE INSTALLED ON EVERY POLE AT 30 DEGREES (ONE FACE) OFF FROM CLIMBING ROUTE AT THE FOLLOWING LOCATIONS:
-BOTTOM BOLT OF ASSEMBLY AT 6" ABOVE TOP BOLT OF TOP CROSS BRACE ASSEMBLY.
-TOP BOLT OF ASSEMBLY AT 6" BELOW BOTTOM OF CLIMBING ROUTE.

SUB-CONDUCTOR SPACER FOR 450240

3 PER PHASE, PER SPAN, EVENLY SPACED

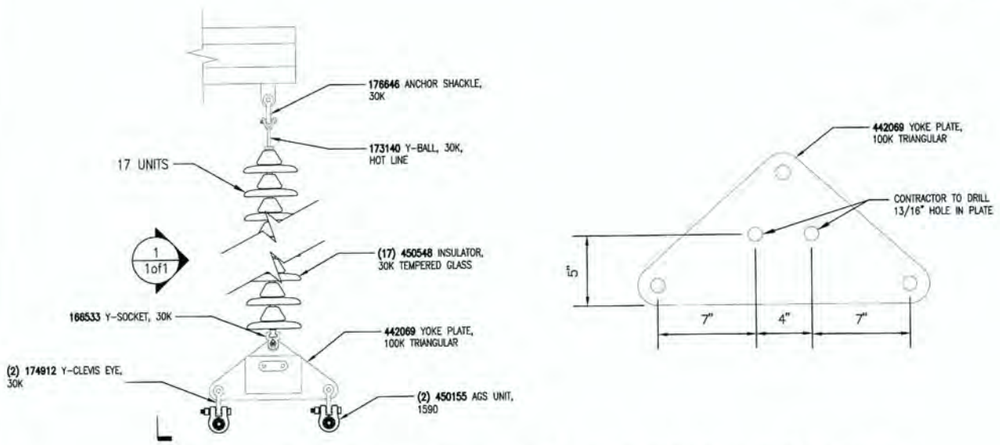

INS-WTS (STR. #68 INSULATOR ATTACHMENT WEIGHT)

REPLACES STANDARD YOKE PLATE

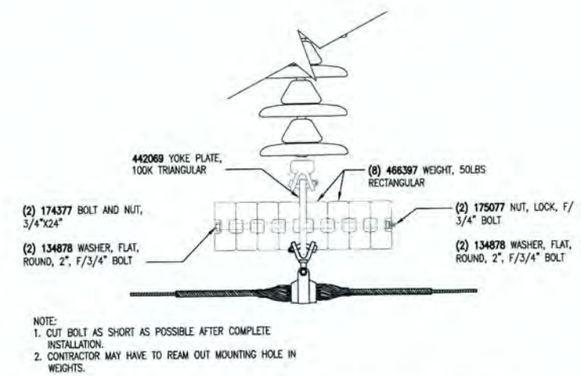

NOTE:
1. CUT BOLT AS SHORT AS POSSIBLE AFTER COMPLETE INSTALLATION.
2. CONTRACTOR MAY HAVE TO REAM OUT MOUNTING HOLE IN WEIGHTS.

INS-WTS DETAIL (7)

SCALE: NTS 1of1

MATERIAL LIST		
STOCK CODE	DESCRIPTION	QTY (EA UNLESS NOTED)
INS-WTS		
442069	PLATE, YOKE, DELTA, 100K	3
466397	WEIGHTS, HOLD DOWN, RECTANGULAR, 50 LBS.	24
174377	BOLT, MACHINE, 3/4" X 24" WITH NUT	6
134878	WASHER, FLAT, ROUND, 2" DIA., FOR 3/4" BOLT	12
175077	NUT, LOCK, MF, FOR 3/4" BOLT	6
TERM-SW-1		
176648	SHACKLE, ANCHOR, GALV., 78K LBS, WITH1" BOLT	2
179512	GRIP, PREFORMED, 19#10 AW	1
178571	CONNECTOR, COMPRESSION, 19#10 AW TO 19#10 AW	1
437024	ROLLER, GUY, FOR 19#10	1
TERM-COND		
449843	CLAMP, DEADEND, COMPRESSION, 1590 54/19 ACSR	6
176646	SHACKLE, ANCHOR, 5/8 IN., BOLT/NUT/KEY, GALV., SCREW PIN, 30,000 LBS	6
467641	PLATE, YOKE, RECTANGULAR, 60K	3
166533	CLEVIS, Y-SOCKET, 3/4 IN PIN, 30K, GALV. STEEL	6
450548	INSULATOR, GLASS, M&E RATED, 53-5, 10 IN., 30,000 LBS	120
173140	BALL, Y-CLEVIS, HOTLINE EXTENSION LINK, GALVANIZED STEEL, 30,000 LBS.	6
466459	PLATE, YOKE, DELTA, 80K, 1-1/4 IN HOLES	3
176648	SHACKLE, ANCHOR, GALV., 78K LBS, WITH1" BOLT	12
467642	CORONA RING	3
449845	CONN., COMP, LUG, 4 HOLE NEMA, 15 DEG, 1590 KCMIL 54/19	6
442780	COMPOUND, JOINT, ELECTRICAL, FILLER, STANDARD CAULKING GUN TUBE, 16 OZ., HIGH TEMP	1
442780	COMPOUND, JOINT, ELECTRICAL, FILLER, STANDARD CAULKING GUN TUBE, 16 OZ., HIGH TEMP	3
175017	LINK, STRAIGHT	3
450240	SPACER, BUNDLED CONDUCTOR, FOR 1590 54/19, 18 IN SPACING, HIGH TEMP	6
SPLAY-GUY		
179513	GRIP, PREFORMED, 19#8 AW	4
177611	CABLE, BARE, #8 ALUMOWELD, 19 STRAND, ALUMINUM	270 FT
176648	SHACKLE, ANCHOR, GALV., 78K LBS, WITH1" BOLT	2
460814	INSULATOR, STRAIN, FIBERGLASS, 120", 80K, CLEVIS-CLEVIS	2
466459	PLATE, YOKE, DELTA, 80K, 1-1/4 IN HOLES	1
437024	ROLLER, GUY, FOR 19#10	2
184719	MARKER, GUY, YELLOW, 8' POLYETHYLENE	2
179287	SPEAR-HEAD, VICE-TYPE CONNECTOR	1
WORKING VANG		
463235	TEE, MOUNTING, GALV., 35K, DOUBLE, 1-1/8" STEM HOLE, 1-1/8" MTG HOLE	2
437016	NUT, LOCKING, 1 IN	2
462973	BOLT, MACHINE, 1 IN, 20 IN OAL, 6 IN MIN THRD, STEEL, GALVANIZED, ANSI A325-1998 TYPE 3, HEX HEAD AND NUT	2

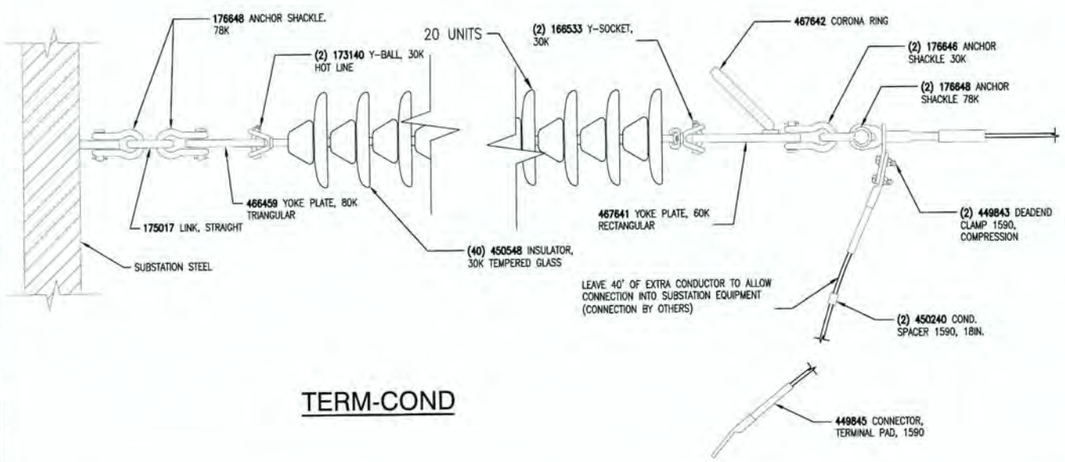

TERM-COND

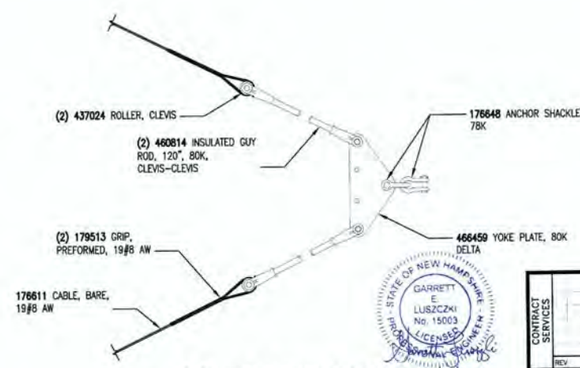

STATE OF NEW HAMPSHIRE GARRETT E. LUSZCZKI No. 15003 LICENSED PROFESSIONAL ENGINEER 12/19/2017

SPLAY-GUY DETAIL

CONTRACT SERVICES						
REV	DESCRIPTION	ENG/PE#	DATE	DRN	CHKD	APPR
2	AS BUILT WO# T1318A1	GEL/15003	12/19/17	JJD	GEL	GEL
1	ISSUED FOR PROJECT RECORD	GEL/15003	12/15/17	JJD	BAF	GEL
0.1	RE-ISSUED FOR CONSTRUCTION	GEL/15003	5/5/17	JJD	BAF	GEL
0	ISSUED FOR CONSTRUCTION	GEL/15003	9/23/16	JJD	BAF	GEL
DWG REV	EPN/DESCRIPTION	CONT/PE#	DATE	DRN	CHKD	APPR

EVERSOURCE ENERGY

LINE 3124 345kV TRANSMISSION
MISCELLANEOUS DETAILS

T / 2	
DRAWN	JJD/TRC
ENGINEER	GEL/TRC
CHECKED	CRP/TRC
APPROVED	GEL/TRC
DATE	02/05/16
SCALE	N.T.S.
FILE: 312405012.DWG	
IMAGE:	
DRAWING NO.	3124405012

12/19/2017 4:02 PM - jdoody - C:\pwworking\emp\ca1\jdoody\d1045458\312405012.dwg - 11X17

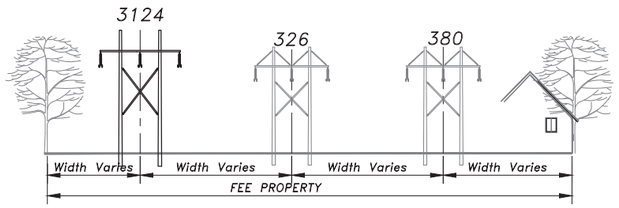

SECTION I

SCOBIE POND 345 kV S/S TO STR. 3
STA. 0+00 TO STA. 13+64

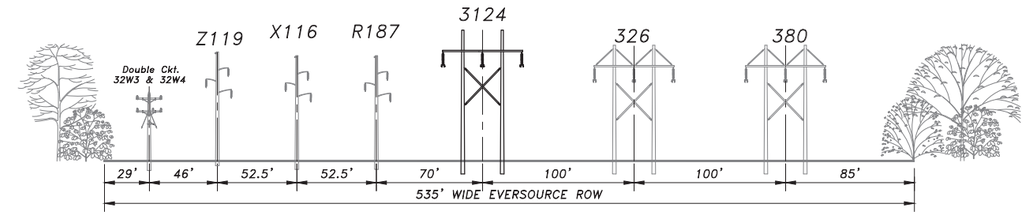

SECTION II

STR. 3 TO DEPARTURE OF 34.5KV
STA. 13+64 TO STA. 30+47±

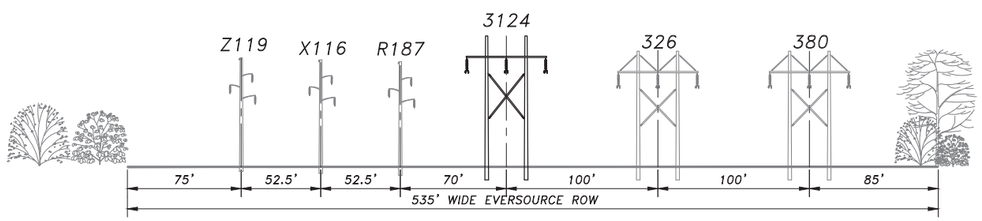

SECTION III

DEPARTURE OF 34.5KV to STR. 13
STA. 30+47± TO STA 71+10

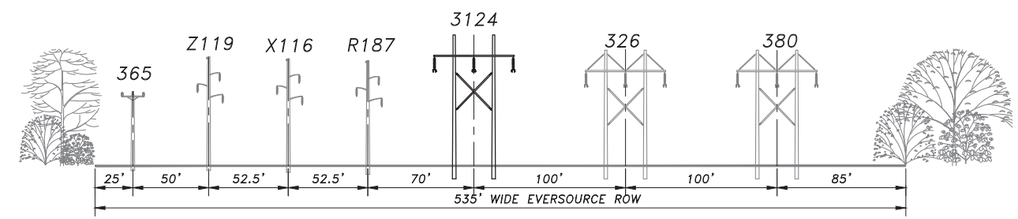

SECTION IV

STR. 13 TO HOVEY ROAD
STA. 71+10 TO STA. 79+57

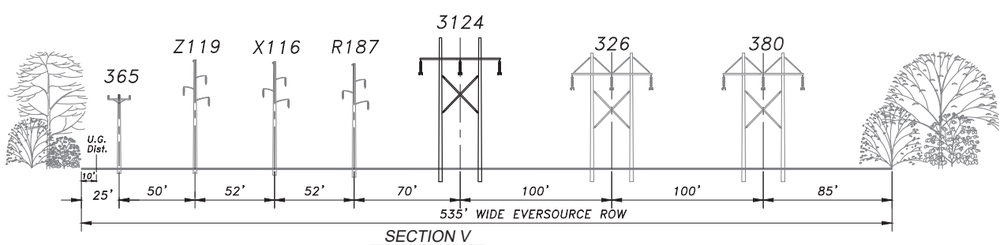

SECTION V

HOVEY ROAD TO STR. 16
STA. 79+57 TO STA. 90+90

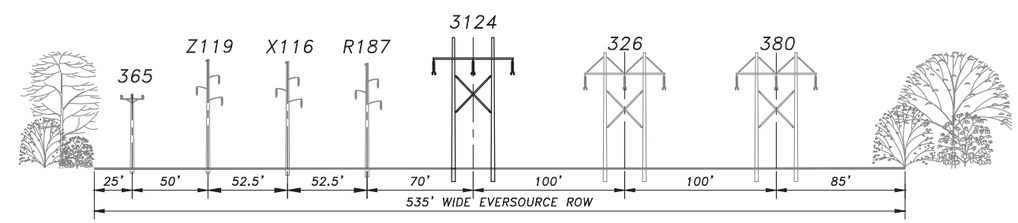

SECTION VI

STR. 16 TO STR. 25 AT MAMMOTH ROAD
STA. 90+90 TO STA. 146+27

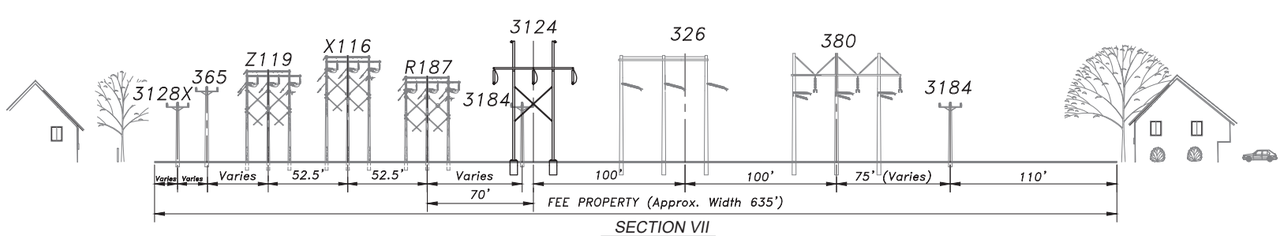

SECTION VII

STR. 25 AT MAMMOTH ROAD TO MAMMOTH ROAD S/S
STA. 146+27 TO STA. 150+21±

CONTRACT SERVICES

REV	DESCRIPTION	ENG/PE#	DATE	DRN	CHKD	APPR
2	AS BUILT WO# T1318A1	–	12/19/17	JJD	GEL	GEL
1	ISSUED FOR PROJECT RECORD	–	12/15/17	JJD	BAF	GEL
0	ISSUED FOR CONSTRUCTION	GEL/15003	9/23/16	JJD	BAF	GEL
DWG REV	EPN/DESCRIPTION	CONT/PE#	DATE	DRN	CHKD	APPR

EVERSOURCE ENERGY

LINE 3124 345 kV TRANSMISSION
RIGHT OF WAY CROSS SECTIONS

SHEET 1 OF 2

T	2
DRAWN	KLB/TRC
ENGINEER	GEL/TRC
CHECKED	CRP/TRC
APPROVED	GEL/TRC
DATE	02/05/16
SCALE	NTS
FILE: 312443801.DWG	
IMAGE:	
DRAWING NO.	312443801

ES VER: 11/2015

12/19/2017 2:21 PM – jdoody – C:\pwworking\emp\pw1\jdoody\d1045458\312443801.dwg – 312443801 SH.1

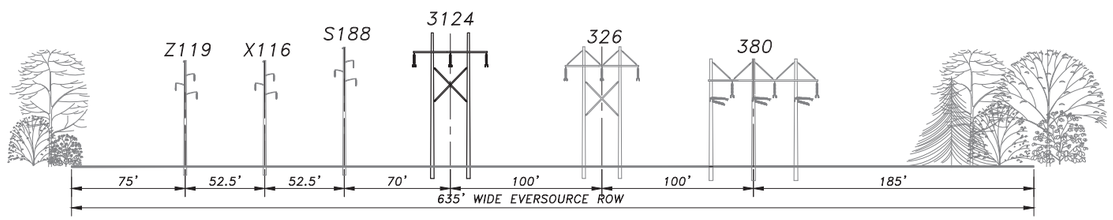

SECTION VIII

MAMMOTH ROAD S/S TO STR. 34 AT HIGH RANGE ROAD
STA. 150+21± TO STA. 198+44

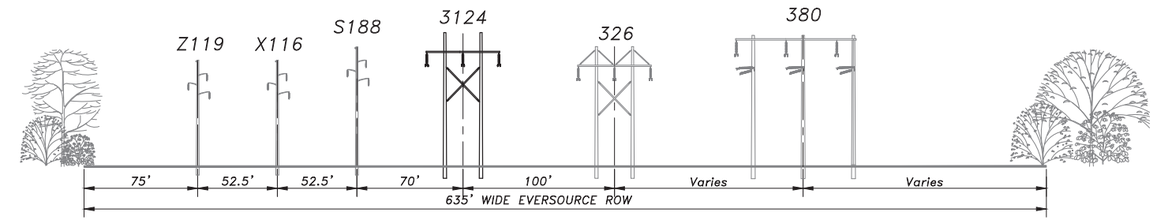

SECTION IX

STR. 34 AT HIGH RANGE ROAD TO STR. 35
STA. 198+44 TO STA. 202+61

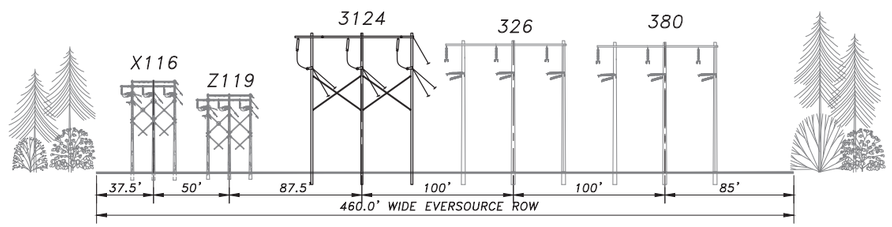

SECTION X

STR. 35 TO STR. 36
STA. 202+61 TO STA. 206+40

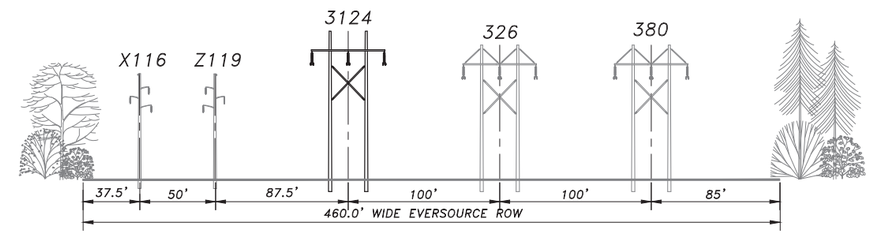

SECTION XI

STR. 36 TO STR. 53 AT NEP ROW
STA. 206+40 TO STA. 309+84

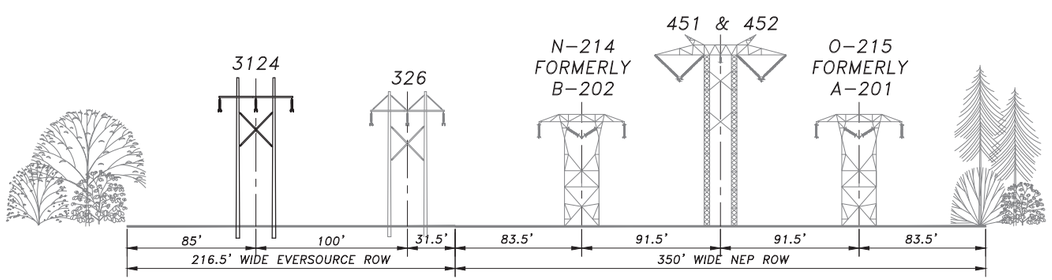

SECTION XII

STR. 53 AT NEP ROW TO STR. 89
STA. 309+84 TO STA. 516+17

CONTRACT SERVICES

REV	DESCRIPTION	ENG/PE#	DATE	DRN	CHKD	APPR
2	AS BUILT WO# T1318A1	-	12/19/17	JDD	GEL	GEL
1	ISSUED FOR PROJECT RECORD	-	12/15/17	JJD	BAF	GEL
0	ISSUED FOR CONSTRUCTION	GEL/15003	9/23/16	JJD	BAF	GEL
DWG REV	EPN/DESCRIPTION	CONT/PE#	DATE	DRN	CHKD	APPR

EVERSOURCE ENERGY

LINE 3124 345 kV TRANSMISSION
RIGHT OF WAY CROSS SECTIONS

SHEET 2 OF 2

T 2

DRAWN KLB/TRC
ENGINEER GEL/TRC
CHECKED CRP/TRC
APPROVED GEL/TRC
DATE 02/05/16

SCALE NTS
FILE: 312443801.DWG
IMAGE:
DRAWING NO. 312443801

ES VER: 11/2015

12/19/2017 2:21 PM - jdoody - C:\pwworking\emp\pw1\jdoody\d1045458\312443801.dwg - 312443801 Sht2

ES VER: 11/2015

11/17/2017 2:37 PM - MWilkins - C:\Users\MWilkins\Desktop\3124 As-builts\R-555-R-59.dwg - AS-BUILT

[redacted]

CONTRACT SERVICES

REV	DESCRIPTION	ENG/PE #	DATE	DRN	CHKD	APPR
62	WO#T1318B01 – 3124 TERMINAL – AS-BUILT		12/17	MSW	DLB	JC
61	WO#T1352A01 – TB30 – AS-BUILT	-	08/17	MSW	DLB	KPD
60	WO#T1312A1 – GEN REPLACEMENT – AS-BUILT	-	06/17	MSW	DLB	JC
59	TB30 REPLACEMENT – IFC	DLB/5951	04/17	MSW	DLB	KPD
58	WO#T1312A1 – GENERATOR REPLACEMENT – IFC	DLB/5951	09/16	MSW	DLB	JC
57	WO#T1312A1 PH1-326 RELAY REPL. & C.H.-AS-BUILT			MSW	DLB	JC
56	WO#T1318A01 – 3124 TERMINAL ADD. – IFC	DLB/5951	4/22/16	MSW	DLB	JC
55	WO#T1312A1 PH1-326 RELAY REPL. & C.H.-IFC	DLB/5951	11/13/15	MSW	DLB	JC
DWG REV	EPN/DESCRIPTION	CONT/PE #	DATE	DRN	CHKD	APPR

REDRAWN FOR REVISION 6297

EVERSOURCE ENERGY

GENERAL PLAN
345KV YARD
SCOBIE POND 345KV S/S
LONDONDERRY, NEW HAMPSHIRE

T 62

DRAWN: OHS

ENGINEER:

CHECKED:

APPROVED:

DATE: 03/07

SCALE: 1"=40'

FILE: R-555-R-59.DWG

IMAGE:

DRAWING NO. R-555-R-59

ES VER: 11/2015

[redacted]

CONTRACT SERVICES

REV	DESCRIPTION	ENG/PE#	DATE	DRN	CHKD	APPR
47	WO#T1318801 – 3124 TERMINAL – AS-BUILT		12/17	MSW	DLB	JC
46	WO#T1352A01 – TB30 – AS-BUILT		06/17	MSW	DLB	KPD
45	TB30 REPLACEMENT – IFC	DLB/5951	04/17	MSW	DLB	KPD
44	WO#T1318A01 – 3124 TERMINAL ADD. – IFC	DLB/5951	4/22/16	MSW	DLB	JC
43	AS BUILT WO#T1251A1		06/07/13	MR	GBS	CSO
42	ISSUED FOR CONSTRUCTION WO#T1251A1		02/22/13	MR	GBS	CSO
41	AS BUILT W.O.#T1206A6, EPN#7469		10/16/12	KMS	TTT	CSO
40	IFC W.O.#T1206A6, EPN#7469	DHG/13303	8/10/12	KMS	TTT	CSO
DWG REV	EPN/DESCRIPTION	CONT/PE#	DATE	DRN	CHKD	APPR

EVERSOURCE ENERGY

ONELINE DIAGRAM
345KV YARD
SCOBIE POND 345KV S/S
LONDONDERRY, NEW HAMPSHIRE

T 47

DRAWN: R. LOUIS

ENGINEER: R.C.F.

CHECKED:

APPROVED:

DATE: 1/8/69

SCALE: NTS

FILE: R-555-37.DWG

IMAGE: .

DRAWING NO. R-555-37

11/17/2017 12:40 PM – MWilkins – C:\Users\MWilkins\Desktop\3124 As-builts\R-555-37.dwg – AS-BUILT

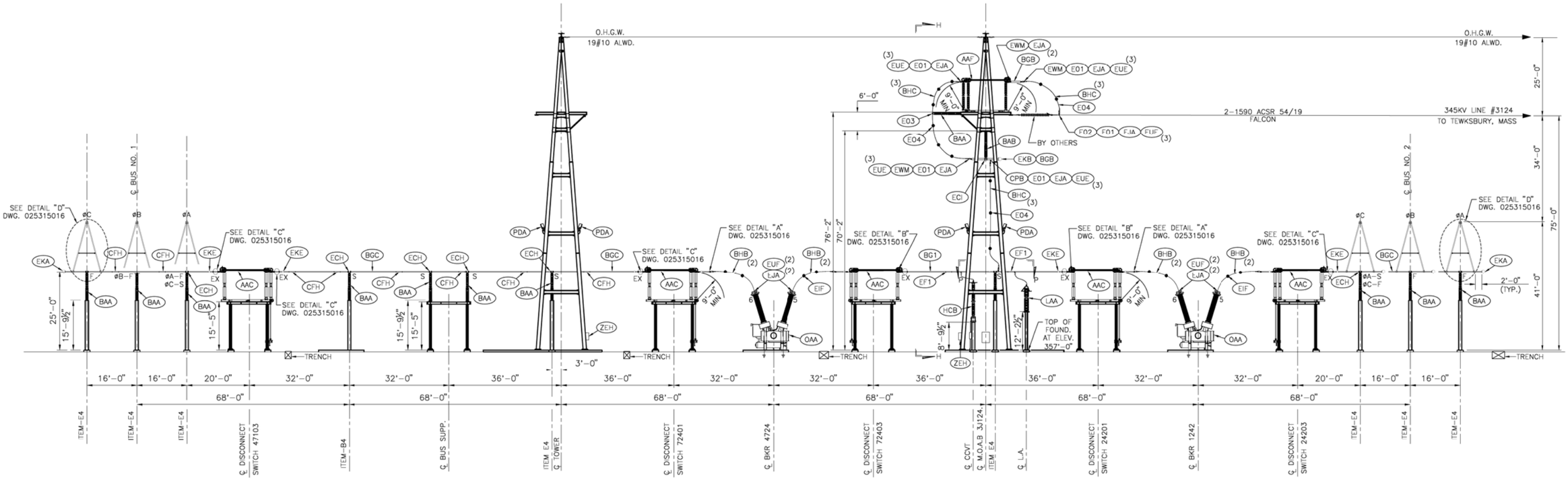

ELEVATION N–N

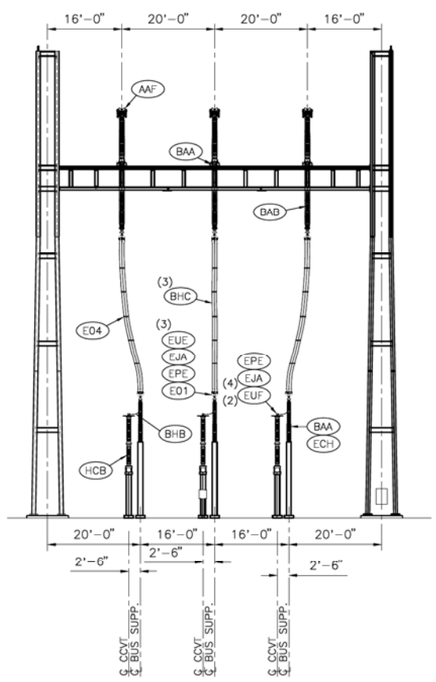

ELEVATION H–H

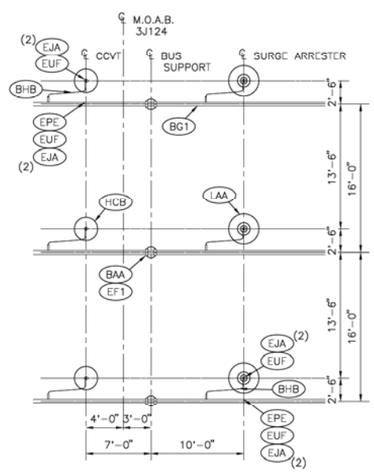

PLAN P–P
SCALE: 1/8" = 1'-0"

NOTES:

1. PHASE TO GROUND CLEARANCE SHALL BE 9'-0" MINIMUM FOR 345KV.
2. PHASE TO PHASE CLEARANCE SHALL BE 13'-6" MINIMUM FOR 345KV.
3. CABLE SPACERS ARE SHOWN IN ARBITRARY LOCATIONS. ACTUAL LOCATIONS MAY HAVE TO BE MODIFIED IF DRAWING PLACEMENT IS NOT FEASIBLE.
4. ALL BUS TUBING SHALL HAVE A 795kcmil 26/7 STRAND ACSR "DRAKE" DAMPENING WIRE INSTALLED INSIDE AND TACK WELDED TO ONE END TO CONTROL AEOLIAN VIBRATION.
5. DRILL DRAIN HOLES INTO ALL BUS TUBING AT MIDSPAN USING A 1/4" DRILL.
6. ALL COMPRESSION TERMINAL CONNECTORS WITH BARREL FACING UPWARD, SHALL HAVE A 1/4" DIA. WEEP HOLE DRILLED AT THE BASE OF THE BARREL.

REFERENCES:

R-555-R-59	GENERAL PLAN 345KV YARD
R-555-R-59-3a	GENERAL ARRANGEMENT ELEVATIONS & SECTIONS
R-555-R-59-3b	GENERAL ARRANGEMENT ELEVATIONS & SECTIONS
025315016	ELECTRICAL DETAILS
025316024	MATERIAL LIST – 3124 LINE TERMINAL ADDITION

REV	DESCRIPTION	ENG/PE#	DATE	DRN	CHKD	APPR
1	WO#11318801 – 3124 TERMINAL – AS-BUILT	-	12/17	MSW	DLB	JC
DWG REV	EPN/DESCRIPTION	CONT/PE#	DATE	DRN	CHKD	APPR

CONTRACT SERVICES

DRAWING FOR EPN 8690

EVERSOURCE ENERGY

T 1

DRAWN MSW/TRC
ENGINEER MSW/TRC
CHECKED DLB/TRC
APPROVED JC
DATE 4/22/2016

GENERAL ARRANGEMENT ELEVATIONS & SECTIONS

SCOBIE POND 345KV S/S

SCALE 1/16" = 1'-0"
FILE: 025314008.DWG
IMAGE:
DRAWING NO. 025314008

ES VER: 11/2015

12/8/2017 9:48 AM – MWilkins – C:\Users\MWilkins\Desktop\3124 As-builts\025314008.dwg – AS-BUILT