# SITE DEVELOPMENT PLANS

## PREPARED FOR

# NORTHERN PASS TRANSMISSION, LLC
# PROPOSED TRANSITION STATION #6

## DANIEL WEBSTER HIGHWAY, BRIDGEWATER, NH 03264

**OWNER:**

THE NORTHERN PASS

**ENGINEER:**

BURNS McDONNELL

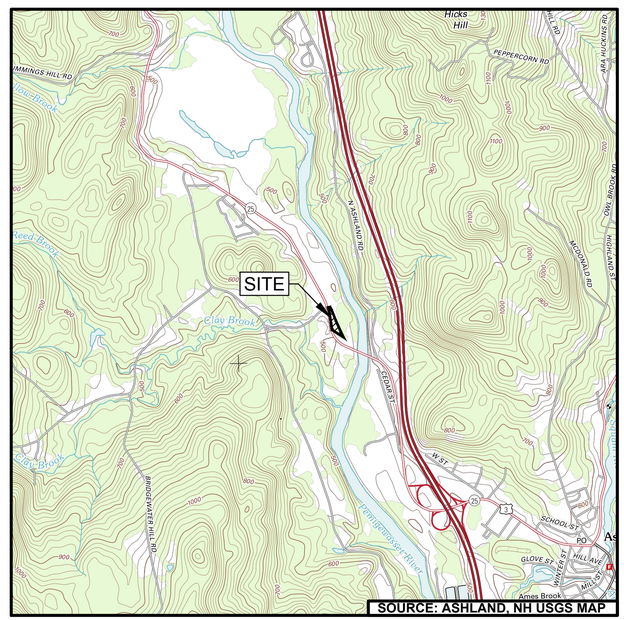


SOURCE: ASHLAND, NH USGS MAP

**VICINITY MAP**

0 2000' 4000'

SCALE IN FEET

**OCTOBER 1, 2015**

**FOR PERMITTING PURPOSES ONLY NOT FOR CONSTRUCTION**

| DRAWING INDEX | |
|---|---|
| DRAWING | DESCRIPTION |
| CVR | COVER SHEET |
| G-001 | GENERAL NOTES AND LEGEND |
| C-100 | SITE LAYOUT PLAN |
| C-101 | GRADING PLAN |
| C-102 | EROSION AND SEDIMENTATION CONTROL PLAN |
| C-103 | PLANTING PLAN |
| C-104 | STORMWATER SYSTEM PLAN |
| C-200 | ACCESS ROAD PROFILE |
| C-300 | SITE CROSS SECTIONS |
| C-500 | EROSION AND SEDIMENTATION CONTROL NOTES |
| C-501 | EROSION AND SEDIMENTATION CONTROL DETAILS |
| C-502 | EROSION AND SEDIMENTATION CONTROL DETAILS |
| C-503 | CONSTRUCTION DETAILS |
| C-504 | CONSTRUCTION DETAILS |
| C-505 | CONSTRUCTION DETAILS |
| C-506 | CONSTRUCTION DETAILS |
| C-507 | CONSTRUCTION DETAILS |
| C-508 | CONSTRUCTION DETAILS |
| C-509 | CONSTRUCTION DETAILS |
| C-510 | CONSTRUCTION DETAILS |


NEW HAMPSHIRE STATE LAW REQUIRES HOMEOWNERS AND CONTRACTORS TO CONTACT DIG SAFE, BY DIALING 8-1-1 AT LEAST THREE BUSINESS DAYS BEFORE BEGINNING ANY DIGGING OR EXCAVATION PROJECT. WHEN DIG SAFE RECEIVES A CALL, THE HOMEOWNER OR CONTRACTOR MUST WAIT 72 BUSINESS HOURS. DURING THIS TIME, UTILITY REPRESENTATIVES RESPOND TO MARK THEIR LINES WITHIN YOUR PRE-MARKED AREA. ALL INFORMATION REGARDING DIG SAFE RULES AND REGULATIONS CAN ALSO BE FOUND AT www.digsafe.com.


This document has been digitally sealed.
Oct 5 2015

| NO. | REVISION | DATE | DRWN | CHKD | APPRV. |
|---|---|---|---|---|---|
| 1 | ISSUED FOR PERMITTING | 10/1/15 | JJS | RLR | BSS |

THE NORTHERN PASS

Transmission Business

TRANSITION STATION #6
COVER SHEET

DATE: 10/1/2015

SCALE: NTS

DES: JJS CHK: RLR
DRW: JJS APR: BSS

TOWN: BRIDGEWATER, NH

TRANSMISSION LINE:

MILE NO:

SHEET 1 OF 20

NPTT901-CVR

REVISION: XXX

Z:\CLIENTS\TND\NUSC\58466_NPT\DESIGN\SUBSTATION\900-TRANSITION_STATION-6\CADD\NPTT901-CVR.DWG 10/5/2015 8:54 AM BSAKIDOVITCH

**BACKGROUND NOTES:**

1. BACKGROUND INFORMATION TAKEN FROM "EXISTING CONDITIONS PLAN" FOR TRANSITION STATION #6, DANIEL WEBSTER HIGHWAY, BRIDGEWATER, NH. PREPARED BY CHA, CONSULTING, INC. DATED MAY 19, 2015. LAST REVISED MAY 19, 2015. SURFACE OBSERVABLE INFORMATION SHOWN HEREON IS THE RESULT OF AN ON-THE-GROUND SURVEY PERFORMED BY CHA, CONSULTING INC. IN MAY, 2015. THERE ARE NO WETLAND FLAGS SHOWN HEREON SINCE NO WETLANDS, STREAMS OR VERNAL POOLS WERE IDENTIFIED DURING A FIELD INVESTIGATION PERFORMED BY NORMANDEAU ON APRIL 27, 2015

2. ELEVATIONS, CONTOURS AND BENCHMARKS ARE BASED ON NAVD 1988 VERTICAL DATUM.

3. HORIZONTAL LOCATIONS ARE BASED ON NEW HAMPSHIRE STATE PLANE COORDINATE SYSTEM NAD 83.

4. THE SITE IS LOCATED WITHIN ZONE 'X' FLOOD ZONE AREAS DETERMINED TO BE OUTSIDE THE 0.2% ANNUAL CHANCE FLOODPLAIN ACCORDING TO THE FEDERAL EMERGENCY MANAGEMENT AGENCY FLOOD INSURANCE RATE MAP NUMBER 33009C1010E PANEL 1010 OF 1185, GRAFTON COUNTY, NH, DATED FEBRUARY 20, 2008.

5. PROPERTY AREA = 2.07AC, NPDES/LIMIT OF DISTURBANCE (LOD) AREA TOTAL = 1.49-ACRES (OF WHICH 1.40-ACRES IS ON-SITE, 0.09-ACRES IS OFF-SITE IN THE DANIEL WEBSTER HIGHWAY).

**GENERAL NOTES:**

1. GENERAL NOTES SHALL APPLY TO THE SITE DEVELOPMENT PLANS THROUGHOUT. REFER TO INDIVIDUAL SHEETS FOR SHEET SPECIFIC NOTES.

2. CONTRACTOR(S) TO TAKE AND VERIFY ALL DIMENSIONS AND CONDITIONS OF THE WORK AND BE RESPONSIBLE FOR COORDINATION OF SAME. FIELD VERIFY ALL EXISTING CONDITIONS PRIOR TO START OF WORK.

3. ENGINEER ASSUMES NO RESPONSIBILITY AS TO THE CONTENT OF THE EXISTING CONDITIONS PLAN INCLUDING BUT NOT LIMITED TO LOCATION, SIZE, AND ELEVATIONS OF UTILITIES AND STRUCTURES NOT VISIBLE AND WHERE TAKEN FROM PLANS BY OTHERS.

4. EXISTING CONDITIONS SURVEY INFORMATION ON EXISTING UTILITIES AND STORM DRAINAGE SYSTEMS HAS BEEN COMPILED FROM AVAILABLE INFORMATION INCLUDING UTILITY COMPANY AND MUNICIPAL RECORD MAPS AND/OR FIELD SURVEY AND IS NOT GUARANTEED CORRECT OR COMPLETE. UTILITIES AND STORM DRAINAGE SYSTEMS ARE SHOWN TO ALERT THE CONTRACTOR TO THEIR PRESENCE AND THE CONTRACTOR IS SOLELY RESPONSIBLE FOR DETERMINING ACTUAL LOCATIONS AND ELEVATIONS OF ALL UTILITIES AND STORM DRAINAGE SYSTEMS INCLUDING SERVICES. PRIOR TO DEMOLITION OR CONSTRUCTION, THE CONTRACTOR SHALL CONTACT "DIGSAFE" PRIOR TO COMMENCEMENT OF WORK AT "811" AND VERIFY ALL UTILITY AND STORM DRAINAGE SYSTEM LOCATIONS.

5. THE CONTRACTOR SHALL VERIFY ALL EXISTING SITE AND BUILDING CONDITIONS IN THE FIELD AND CONTACT THE OWNER AND ENGINEER IF THERE ARE ANY QUESTIONS AND/OR CONFLICTS REGARDING THE SITE DEVELOPMENT PLANS AND/OR EXISTING FIELD CONDITIONS PRIOR TO CONSTRUCTION. REFER TO THE PROJECT SPECIFICATIONS MANUAL FOR ADDITIONAL INFORMATION. SHOULD ANY UNCHARTED OR INCORRECTLY CHARTED, EXISTING PIPING OR OTHER UTILITY BE UNCOVERED DURING EXCAVATION, INFORM THE OWNER AND CONSULT THE CIVIL ENGINEER IMMEDIATELY FOR DIRECTIONS BEFORE PROCEEDING FURTHER WITH WORK IN THIS AREA.

6. ALL CONSTRUCTION SHALL COMPLY WITH PROJECT SPECIFICATION MANUAL, EVERSOURCE STANDARDS AND SPECIFICATIONS, AND THESE PLANS. IF SPECIFICATIONS ARE IN CONFLICT, THE MORE STRINGENT SPECIFICATION SHALL APPLY. ALL CONSTRUCTION SHALL BE PERFORMED IN ACCORDANCE WITH ALL APPLICABLE OSHA, FEDERAL, STATE AND LOCAL REGULATIONS. INCLUDING BUT NOT LIMITED TO THE FOLLOWING:
   a. NEW HAMPSHIRE STORMWATER MANUAL, VOLUMES 1, 2 & 3, DECEMBER 2008.
   b. NEW HAMPSHIRE DEPARTMENT OF TRANSPORTATION MANUAL ON DRAINAGE DESIGN FOR HIGHWAYS, REVISION DATE APRIL 1998.
   c. NEW HAMPSHIRE DEPARTMENT OF TRANSPORTATION STANDARD PLANS AND SPECIFICATIONS (2010).
   d. EVERSOURCE BEST MANAGEMENT PRACTICES MANUAL (TO BE FURTHER DEVELOPED).
   e. EVERSOURCE STANDARD SPECIFICATIONS (10-24-2014).

7. DO NOT INTERRUPT EXISTING SERVICING UTILITIES AND FACILITIES OCCUPIED AND USED BY THE OWNER OR OTHERS DURING OCCUPIED HOURS EXCEPT WHEN SUCH INTERRUPTIONS HAVE BEEN AUTHORIZED IN WRITING BY THE OWNER, THE LOCAL MUNICIPALITIES, THE UTILITY PROVIDER, AND ANY APPLICABLE REGULATORY AGENCY. INTERRUPTIONS SHALL ONLY OCCUR AFTER ACCEPTABLE TEMPORARY SERVICE HAS BEEN PROVIDED.

8. THE CONTRACTOR SHALL PROVIDE RECORD AS-BUILT DRAWINGS OF ALL CONSTRUCTION IN ACCORDANCE WITH OWNER AND REGULATORY AGENCY REQUIREMENTS (INCLUDING UNDERGROUND UTILITIES) TO THE OWNER AT THE END OF CONSTRUCTION.

9. WRITTEN DIMENSIONS HAVE PRECEDENCE OVER SCALED DIMENSIONS. THE CONTRACTOR SHALL USE CAUTION WHEN SCALING PLANS. IN CASE OF CONFLICT BETWEEN PLAN SET AND ANY OTHER DRAWING AND/OR SPECIFICATION, THE ENGINEER SHALL BE NOTIFIED IMMEDIATELY FOR CLARIFICATION.

10. IF A CONFLICT ARISES BETWEEN PLANS, SPECIFICATIONS, AND/OR DETAILS, THE ENGINEER SHALL BE NOTIFIED IMMEDIATELY FOR CLARIFICATION.

11. THE CONTRACTOR SHALL ABIDE BY ALL OSHA, FEDERAL, STATE, AND LOCAL REGULATIONS IN ALL INSTANCES AND WHEN OPERATING CRANES, BOOMS, HOISTS, ETC. IN CLOSE PROXIMITY TO OVERHEAD ELECTRIC LINES. IF CONTRACTOR MUST OPERATE EQUIPMENT CLOSE TO ELECTRIC LINES, CONTACT POWER COMPANY TO MAKE ARRANGEMENT FOR PROPER SAFEGUARDS. ANY UTILITY COMPANY FEES SHALL BE PAID FOR BY THE CONTRACTOR.

12. THE ENGINEER IS NOT RESPONSIBLE FOR SITE SAFETY MEASURES TO BE EMPLOYED DURING CONSTRUCTION. THE ENGINEER HAS NO CONTRACTUAL DUTY TO CONTROL THE SAFEST METHODS OR MEANS OF THE WORK, JOB SITE RESPONSIBILITIES, SUPERVISION OR TO SUPERVISE SAFETY AND DOES NOT VOLUNTARILY ASSUME ANY SUCH DUTY OR RESPONSIBILITY.

13. ALL NOTES AND DIMENSIONS DESIGNATED "TYPICAL" OR "(TYP.)" APPLY TO ALL LIKE OR SIMILAR CONDITIONS THROUGHOUT THE PROJECT.

14. ALTERNATIVE METHODS AND PRODUCTS OTHER THAN THOSE SPECIFIED MAY BE USED IF SUBMITTED, REVIEWED, AND APPROVED BY THE OWNER, ENGINEER, AND APPROPRIATE REGULATORY AGENCY PRIOR TO CONSTRUCTION.

15. THE CONTRACTOR SHALL SUBMIT SHOP DRAWINGS OF ALL PRODUCTS AND MATERIALS PER PLANS AND SPECIFICATIONS TO THE OWNER AND ENGINEER FOR REVIEW AND APPROVAL PRIOR TO ORDERING, FABRICATION, OR DELIVERY TO THE SITE. FOR EACH SUBMITTAL, ALLOW A MINIMUM OF 14 WORKING DAYS FOR REVIEW.

16. THE CONTRACTOR SHALL RESTORE ANY DRAINAGE STRUCTURE, PIPE, UTILITY, PAVEMENT, CURBS, SIDEWALKS, LANDSCAPED AREAS OR SIGNAGE AND OTHER INCIDENTAL DISTURBANCES AND DAMAGES DURING CONSTRUCTION TO THEIR ORIGINAL CONDITION OR BETTER, AS APPROVED BY THE OWNER, ENGINEER AND REGULATORY AGENCY.

17. THE CONTRACTOR SHALL COMPLY WITH 29 CFR PART 1926 FOR EXCAVATION TRENCHING AND TRENCH PROTECTION REQUIREMENTS.

18. NO CONSTRUCTION OR DEMOLITION SHALL BEGIN UNTIL APPROVAL OF THE FINAL PLANS IS GRANTED BY ALL GOVERNING AND REGULATORY AGENCIES.

19. DEMOLITION OF EXISTING CONDITIONS INCLUDING BUT NOT LIMITED TO BUILDINGS, STRUCTURES, PAVEMENT, WELLS, SEPTIC, SANITARY SEWER, FENCES, TREES, ETC. SHALL BE PER THE DIRECTION OF EVERSOURCE AND SHALL BE IN ACCORDANCE WITH ALL APPLICABLE LOCAL, STATE, AND FEDERAL REGULATIONS.

20. PERMANENT BENCHMARKS SHALL BE INSTALLED UPON COMPLETION OF CLEARING.

21. ELECTRICAL SUBSTATION COMPONENTS, UNDERGROUND TRANSMISSION LINES, OVER HEAD TRANSMISSION LINES AND THEIR FOUNDATIONS DEPICTED HEREIN ARE FOR REFERENCE ONLY.

22. ANY CLEARED AND EXCAVATED MATERIALS WHICH ARE SUSPECTED OF BEING ENVIRONMENTALLY POLLUTED, CONTAMINATED, OR IMPACTED SHALL BE STOCKPILED ON-SITE ON TOP OF POLYETHYLENE SHEETING AND COVERED WITH POLYETHYLENE SHEETING. THE OWNER AND ENGINEER SHALL BE IMMEDIATELY INFORMED UPON ENCOUNTERING THIS MATERIAL. STORAGE, TESTING, TREATMENT, REMOVAL, AND DISPOSAL OF ENVIRONMENTALLY POLLUTED, CONTAMINATED, OR IMPACTED MATERIAL SHALL BE IN ACCORDANCE WITH APPLICABLE LOCAL, STATE, AND FEDERAL REGULATIONS.

23. CONTRACTOR SHALL TAKE PRECAUTIONS TO ENSURE NO DISTURBANCE BEYOND THE DEPICTED LIMIT OF DISTURBANCE.

24. THE CONTRACTOR SHALL ESTABLISH BEST MANAGEMENT PRACTICES FOR BLASTING OF BEDROCK IN ACCORDANCE WITH THE NHDES PUBLICATION WD-10-12. ROCK BLASTING AND WATER QUALITY MEASURES THAT CAN BE TAKEN TO PROTECT WATER QUALITY AND MITIGATE IMPACTS, 2010. IF THE BLAST ROCK VOLUME GENERATED IS GREATER THAN 5,000 CUBIC YARDS, THE CONTRACTOR SHALL DEVELOP A GROUNDWATER MONITORING PROGRAM FOR SUBMISSION TO THE OWNER AND ENGINEER. BLASTING SHALL NOT COMMENCE UNTIL THESE REQUIREMENTS ARE APPROVED BY THE NHDES, AS REQUIRED.

25. PROPOSED STORM DRAINAGE SYSTEM SHALL BE HS-20 RATED.

**EXISTING LEGEND**

| | |
|---|---|
| | PROPERTY LINE |
| | ADJOINING PROPERTY LINE |
| | RIGHT OF WAY LINE |
| | EASEMENT LINE |
| 385 | MAJOR CONTOUR |
| 381 | MINOR CONTOUR |
| | TREELINE |
| OHW | OVER HEAD WIRE |
| | STOCKADE FENCE |
| | CHAIN LINK FENCE |
| | STONEWALL |
| IP | IRON PIPE |
| CB/DH | CONCRETE BOUND WITH DRILL HOLE |
| SB/DH | STONE BOUND WITH DRILL HOLE |
| | SURVEY CONTROL POINT |
| | UTILITY POLE |

**PROPOSED LEGEND**

| | |
|---|---|
| 385 | MAJOR CONTOUR |
| 381 | MINOR CONTOUR |
| | TREELINE |
| | PERIMETER FENCE |
| | GUIDERAIL |
| | SILT FENCE |
| | CONSTRUCTION FENCE |
| | LIMIT OF STONE SURFACING |
| LOD | LIMIT OF DISTURBANCE |
| | STORMWATER SWALE |
| | STORM SEWER PIPE |
| | STORM INLET |
| | MANHOLE |
| | OUTLET CONTROL STRUCTURE |
| | FLARED END SECTION |
| CO | CLEANOUT |
| 380.50 | SPOT ELEVATION |
| | RIP RAP |
| | STONE SURFACING |
| UaC UaD | NRCS SOIL TYPE/BOUNDARY |

**LIST OF ABBREVIATIONS**

| | | | |
|---|---|---|---|
| ACP | ASBESTOS CEMENT PIPE | LBS | POUNDS |
| APT | ANGLE POINT | LF | LINEAR FOOT |
| ASTM | AMERICAN SOCIETY FOR TESTING AND MATERIALS | LG | WALL HIGH GRADE |
| BIT | BITUMINOUS CONCRETE | LOD | LIMIT OF DISTURBANCE |
| BLDG | BUILDING | MAX | MAXIMUM |
| BM | BENCH MARK | MFR | MANUFACTURER |
| BW | BOTTOM OF WALL | MH | MANHOLE |
| CB | CATCH BASIN | MIN | MINIMUM |
| CATV | CABLE TELEVISION | N | NORTHING |
| CI | CAST IRON PIPE | NO | NUMBER |
| CIC | CAST IRON COVER | NOM | NOMINAL |
| ℄ | CENTERLINE | OC | ON CENTER |
| CL | CENTERLINE | OCS | OUTLET CONTROL STRUCTURE |
| CLF | CHAIN LINK FENCE | OD | OUTSIDE DIMENSION |
| CLR | CLEAR | PC | POINT OF CURVATURE |
| CMP | CORRUGATED METAL PIPE | POB | POINT OF BEGINNING |
| CO | CLEANOUT | PIV | POST INDICATOR VALVE |
| CONC | CONCRETE | PRC | POINT OF REVERSE CURVATURE |
| COR | CORNER | PSI | POUNDS PER SQUARE INCH |
| CTRS | CENTERS | PT | POINT OF TANGENCY |
| DIA | DIAMETER | PVC | POLYVINYL CHLORIDE PIPE |
| DMH | DRAINAGE MANHOLE | R | RADIUS |
| E | EASTING | RAD | RADIUS |
| EL | ELEVATION | RCP | REINFORCED CONCRETE PIPE |
| EMH | ELECTRIC MANHOLE | SD | STORM DRAIN |
| EOP | EDGE OF PAVEMENT | SDMH | STORM DRAIN MANHOLE |
| EXP | EXPANSION | SESC | SOIL EROSION AND SEDIMENT CONTROL |
| EXIST | EXISTING | SS | SANITARY SEWER |
| G | GAS | SSMH | SANITARY SEWER MANHOLE |
| GALV | GALVANIZED | SSFM | SANITARY SEWER FORCE MAIN |
| GR | GRATE | SQ FT | SQUARE FOOT |
| HDPE | CORRUGATED HIGH DENSITY POLYETHYLENE PIPE | SQ M | SQUARE METER |
| HT | HEIGHT | TYP | TYPICAL |
| INV | INVERT | TW | TOP OF WALL |
| | | UC | UNDERGROUND COMMUNICATION |
| | | UD | UNDERDRAIN |
| | | UE | UNDERGROUND ELECTRICAL |
| | | UP | UTILITY POLE |
| | | VC | VITRIFIED CLAY PIPE |
| | | W/O | WITHOUT |

STATE OF NEW HAMPSHIRE BRIAN S. SAKIDOVITCH No. 14326 LICENSED PROFESSIONAL ENGINEER

This document has been digitally sealed. Oct 5 2015

**FOR PERMITTING PURPOSES ONLY NOT FOR CONSTRUCTION**

| NO. | REVISION | DATE | DRWN | CHKD | APPRV. |
|---|---|---|---|---|---|
| 1 | ISSUED FOR PERMITTING | 10/1/15 | JJS | RLR | BSS |

THE NORTHERN PASS

Transmission Business

TRANSITION STATION #6 GENERAL NOTES AND LEGEND

DATE: 10/1/2015

SCALE: NTS

DES: JJS | CHK: RLR
DRW: JJS | APR: BSS

TOWN: BRIDGEWATER, NH

TRANSMISSION LINE:

MILE NO:

SHEET 2 OF 20

NPTT902-G001

REVISION: XXX

Z:\CLIENTS\TND\NUSC\58466_NPT\DESIGN\SUBSTATION\900-TRANSITION_STATION-6\CADD\NPTT902-G001.DWG 10/5/2015 8:27 AM BSAKIDOVITCH

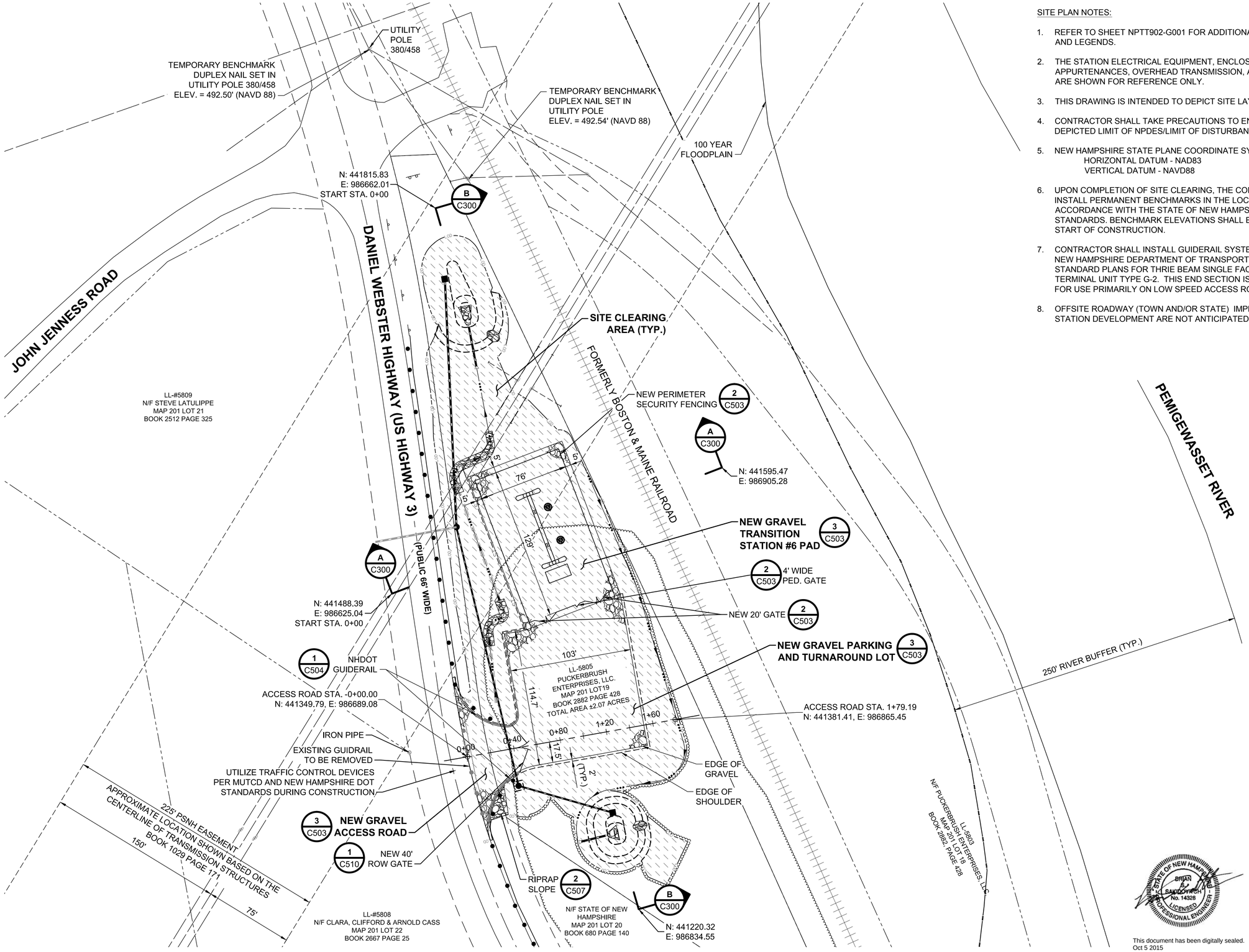


SITE PLAN NOTES:

1. REFER TO SHEET NPTT902-G001 FOR ADDITIONAL GENERAL NOTES, ABBREVIATIONS, AND LEGENDS.
2. THE STATION ELECTRICAL EQUIPMENT, ENCLOSURES, FOUNDATIONS, OTHER STATION APPURTENANCES, OVERHEAD TRANSMISSION, AND UNDERGROUND TRANSMISSION ARE SHOWN FOR REFERENCE ONLY.
3. THIS DRAWING IS INTENDED TO DEPICT SITE LAYOUT ONLY.
4. CONTRACTOR SHALL TAKE PRECAUTIONS TO ENSURE NO DISTURBANCE BEYOND DEPICTED LIMIT OF NPDES/LIMIT OF DISTURBANCE.
5. NEW HAMPSHIRE STATE PLANE COORDINATE SYSTEM
   HORIZONTAL DATUM - NAD83
   VERTICAL DATUM - NAVD88
6. UPON COMPLETION OF SITE CLEARING, THE CONTRACTOR SHALL FURNISH AND INSTALL PERMANENT BENCHMARKS IN THE LOCATIONS DEPICTED ON THE PLANS IN ACCORDANCE WITH THE STATE OF NEW HAMPSHIRE SURVEYING CODES AND STANDARDS. BENCHMARK ELEVATIONS SHALL BE SET IN FIELD AND VERIFIED PRIOR TO START OF CONSTRUCTION.
7. CONTRACTOR SHALL INSTALL GUIDERAIL SYSTEMS AS DEPICTED IN ACCORDANCE WITH NEW HAMPSHIRE DEPARTMENT OF TRANSPORTATION STANDARD SPECIFICATIONS AND STANDARD PLANS FOR THRIE BEAM SINGLE FACED GUIDERAIL WITH STEEL POSTS AND TERMINAL UNIT TYPE G-2. THIS END SECTION IS NOT CRASH WORTHY. IT IS INTENDED FOR USE PRIMARILY ON LOW SPEED ACCESS ROADS WHERE IT CAN NOT BE HIT.
8. OFFSITE ROADWAY (TOWN AND/OR STATE) IMPROVEMENTS AS A RESULT OF THE STATION DEVELOPMENT ARE NOT ANTICIPATED.

STATE OF NEW HAMPSHIRE
BRIAN C. SAKLOWITCH
No. 14328
LICENSED
PROFESSIONAL ENGINEER

This document has been digitally sealed.
Oct 5 2015

**FOR PERMITTING PURPOSES ONLY**
**NOT FOR CONSTRUCTION**

| NO. | REVISION | DATE | DRWN | CHKD | APPRV. |
|---|---|---|---|---|---|
| 1 | ISSUED FOR PERMITTING | 10/1/15 | JJS | RLR | BSS |

THE NORTHERN PASS
Transmission Business

TRANSITION STATION #6
SITE LAYOUT PLAN

DATE: 10/1/2015
SCALE: 1" = 40'

DES: JJS | CHK: RLR
DRW: JJS | APR: BSS
TOWN: BRIDGEWATER, NH
TRANSMISSION LINE:
MILE NO:
SHEET 3 OF 20
NPTT903-C100

REVISION: XXX

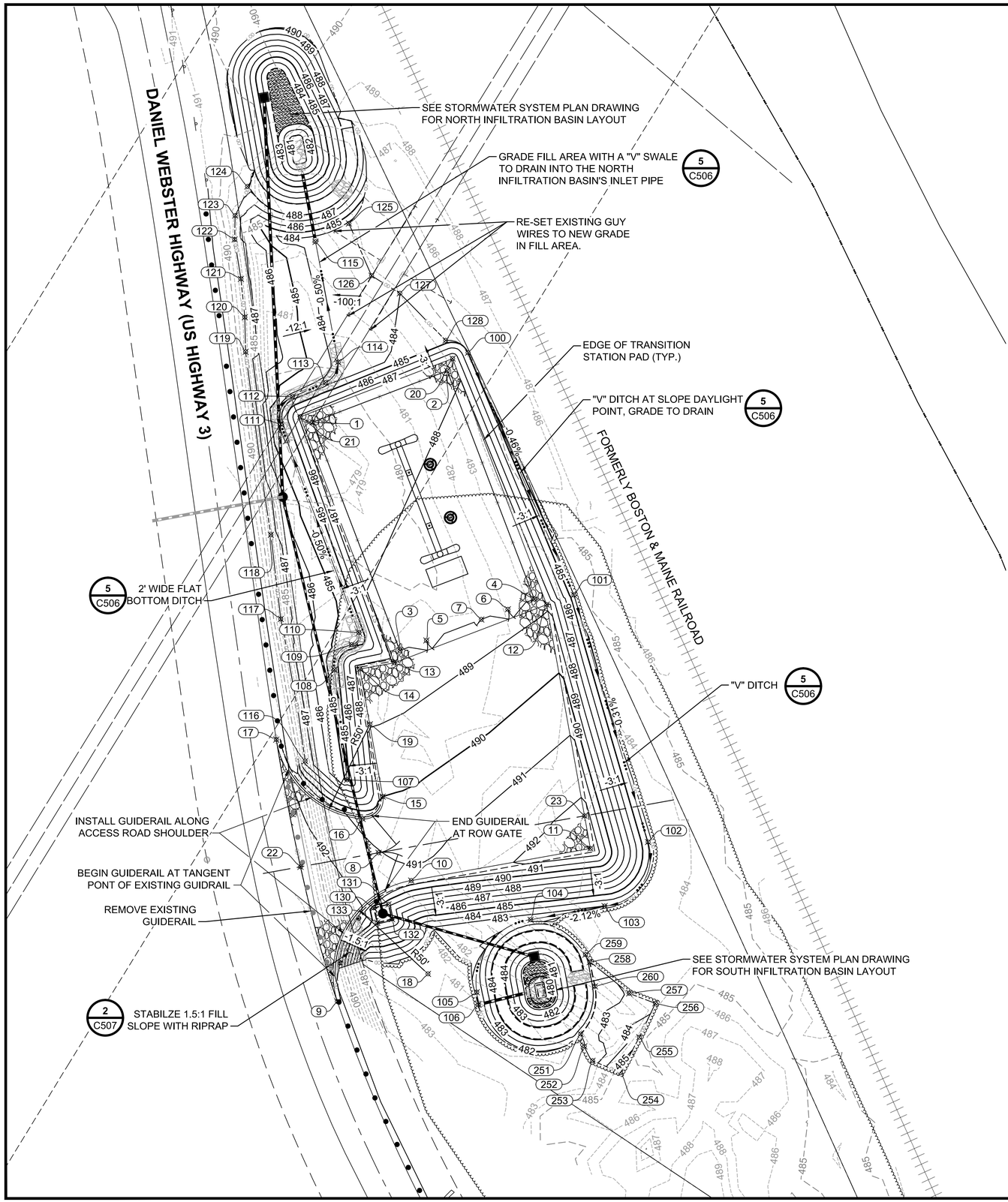


## POINT TABLE

| PNT | NORTHING | EASTING | ELEV. | DESCRIPTION |
|---|---|---|---|---|
| 1 | 441584.33 | 986695.42 | | CHAIN-LINK FENCE CORNER |
| 2 | 441611.47 | 986766.42 | | CHAIN-LINK FENCE CORNER |
| 3 | 441463.84 | 986741.48 | | CHAIN-LINK FENCE CORNER |
| 4 | 441490.97 | 986812.46 | | CHAIN-LINK FENCE CORNER |
| 5 | 441469.19 | 986755.49 | | CENTERLINE 20' CHAIN-LINK GATE |
| 6 | 441485.62 | 986798.45 | | CENTERLINE 20' CHAIN-LINK GATE |
| 7 | 441480.26 | 986784.44 | | HINGE POINT 4' CHAIN-LINK GATE |
| 8 | 441357.17 | 986730.25 | | CENTERLINE 40' ROW GATE |
| 9 | 441278.69 | 986708.49 | 492.97 | GRAVEL PC (MATCH EXISTING) |
| 10 | 441342.48 | 986747.49 | 491.18 | GRAVEL PT |
| 11 | 441359.43 | 986842.00 | 492.82 | GRAVEL CORNER |
| 12 | 441488.08 | 986818.93 | 488.90 | GRAVEL CORNER |
| 13 | 441457.38 | 986738.59 | 488.29 | GRAVEL PI |
| 14 | 441454.11 | 986720.36 | 488.16 | GRAVEL CORNER |
| 15 | 441386.81 | 986732.43 | 490.00 | GRAVEL PC |
| 16 | 441375.07 | 986721.82 | 490.79 | GRAVEL PT/PC |
| 17 | 441416.88 | 986676.31 | 492.48 | GRAVEL PT (MATCH EXISTING) |
| 18 | 441293.27 | 986756.32 | | GRAVEL CENTER 50' RADIUS |
| 19 | 441424.92 | 986725.66 | | GRAVEL CENTER 50' RADIUS |
| 20 | 441617.92 | 986769.30 | 487.91 | GRAVEL PAD CORNER |
| 21 | 441587.22 | 986688.97 | 487.30 | GRAVEL PAD CORNER |
| 22 | 441349.79 | 986689.08 | 492.74 | ACCESS ROAD CL - BEGINNING |
| 23 | 441376.65 | 986838.91 | 492.30 | ACCESS ROAD CL - END |
| 100 | 441621.04 | 986777.45 | 485.00 | DITCH CL - BEGINNING |
| 101 | 441493.17 | 986833.27 | 484.36 | DITCH CL - PI |
| 102 | 441362.85 | 986872.41 | 483.94 | DITCH CL - PC |
| 103 | 441329.04 | 986849.48 | 482.97 | DITCH CL - PT |
| 104 | 441321.82 | 986810.46 | 482.13 | DITCH CL - PC |
| 105 | 441283.59 | 986782.06 | 481.08 | DITCH CL - PT |
| 106 | 441277.01 | 986782.84 | 480.85 | DITCH CL - END |
| 107 | 441395.69 | 986713.70 | 484.96 | DITCH CL - BEGINNING |
| 108 | 441453.76 | 986707.04 | 484.67 | DITCH CL - PC (11' RADIUS) |
| 109 | 441466.97 | 986716.04 | 484.59 | DITCH CL - PT/PC (5' RADIUS) |
| 110 | 441473.32 | 986719.86 | 484.54 | DITCH CL - PT |
| 111 | 441583.26 | 986678.66 | 483.95 | DITCH CL - PC (11' RADIUS) |
| 112 | 441597.75 | 986684.90 | 483.87 | DITCH CL - PT |
| 113 | 441605.14 | 986702.27 | 483.78 | DITCH CL - PC (12' RADIUS) |
| 114 | 441616.09 | 986708.94 | 483.70 | DITCH CL - PT |
| 115 | 441679.55 | 986697.02 | 483.38 | DITCH CL - END |
| 116 | 441405.53 | 986691.52 | 487.55 | DAYLIGHT SLOPE MATCH POINT |
| 117 | 441480.51 | 986678.67 | 487.50 | DAYLIGHT SLOPE MATCH POINT |
| 118 | 441524.95 | 986673.43 | 487.41 | DAYLIGHT SLOPE MATCH POINT |
| 119 | 441621.51 | 986660.12 | 487.53 | DAYLIGHT SLOPE MATCH POINT |
| 120 | 441639.75 | 986659.71 | 487.47 | DAYLIGHT SLOPE MATCH POINT |
| 121 | 441659.99 | 986657.66 | 487.42 | DAYLIGHT SLOPE MATCH POINT |
| 122 | 441680.78 | 986654.32 | 487.54 | DAYLIGHT SLOPE MATCH POINT |
| 123 | 441693.37 | 986654.63 | 487.55 | DAYLIGHT SLOPE MATCH POINT |
| 124 | 441708.73 | 986661.09 | 488.29 | DAYLIGHT SLOPE MATCH POINT |
| 125 | 441689.21 | 986714.61 | 483.76 | DAYLIGHT SLOPE MATCH POINT |
| 126 | 441661.65 | 986726.57 | 483.75 | DAYLIGHT SLOPE MATCH POINT |
| 127 | 441652.35 | 986741.49 | 484.00 | DAYLIGHT SLOPE MATCH POINT |
| 128 | 441627.51 | 986765.64 | 484.49 | DAYLIGHT SLOPE MATCH POINT |
| 130 | 441328.07 | 986727.69 | 489.30 | MANHOLE PAD CORNER |
| 131 | 441329.94 | 986735.47 | 489.30 | MANHOLE PAD CORNER |
| 132 | 441322.16 | 986737.34 | 489.22 | MANHOLE PAD CORNER |
| 133 | 441320.29 | 986729.56 | 489.22 | MANHOLE PAD CORNER |
| 251 | 441261.54 | 986836.88 | 482.32 | TOE OF BASIN OUTSIDE SLOPE/MATCH POINT |
| 252 | 441255.04 | 986838.80 | 482.15 | DAYLIGHT SLOPE MATCH POINT |
| 253 | 441247.42 | 986843.12 | 482.34 | DAYLIGHT SLOPE MATCH POINT |
| 254 | 441241.15 | 986857.94 | 485.73 | DAYLIGHT SLOPE MATCH POINT |
| 255 | 441259.86 | 986867.81 | 484.57 | DAYLIGHT SLOPE MATCH POINT |
| 256 | 441277.72 | 986876.27 | 483.74 | DAYLIGHT SLOPE MATCH POINT |
| 257 | 441282.98 | 986862.48 | 483.08 | DAYLIGHT SLOPE MATCH POINT |
| 258 | 441299.45 | 986841.69 | 482.72 | DAYLIGHT SLOPE MATCH POINT |

## POINT TABLE

| PNT | NORTHING | EASTING | ELEV. | DESCRIPTION |
|---|---|---|---|---|
| 259 | 441303.41 | 986839.39 | 483.00 | TOE OF BASIN OUTSIDE SLOPE/MATCH POINT |
| 260 | 441286.69 | 986844.37 | 482.59 | TOE OF BASIN OUTSIDE SLOPE - PC |

GRADING PLAN NOTES:

1. REFER TO SHEET NPTT902-G001 FOR ADDITIONAL GENERAL NOTES, ABBREVIATIONS, AND LEGENDS.
2. REFER TO SHEET NPTT909-C300 FOR GRADING CROSS SECTIONS.
3. NEW HAMPSHIRE STATE PLANE COORDINATE SYSTEM
   HORIZONTAL DATUM - NAD83
   VERTICAL DATUM - NAVD88
4. PROPOSED CONTOURS AND SPOT ELEVATIONS INDICATED REFER TO TOP OF FINISH SURFACE.
5. ALL FILL AND CUT SLOPES ARE 3-FT HORIZONTAL TO 1-FT VERTICAL (3:1) UNLESS NOTED OTHERWISE.
6. CONTRACTOR SHALL PLACE 4" TOPSOIL AND SEED ON ALL CUT AND FILL SLOPES AS SPECIFIED UNLESS ANOTHER SURFACE MATERIAL IS INDICATED. EROSION CONTROL BLANKETS (NORTH AMERICAN GREEN SC250 OR ENGINEER APPROVED EQUAL) SHALL BE PLACED OVER ALL SEEDED SIDE SLOPES.
7. AFTER COMPLETION OF YARD SUBGRADE WORK, THE SURFACE COURSE FOR THE SUBSTATION (INSIDE THE FENCE, 5-FT OUTSIDE THE FENCE, AND WHERE INDICATED ON THE PLANS) SHALL CONSISTS OF A 4-INCH LAYER OF CRUSHED BASALT (ANGULAR STONE) STONE MEETING THE GRADATION REQUIREMENTS EXPLAINED IN THE SPECIFICATIONS.
8. CONTRACTOR SHALL PROTECT/REPAIR ALL SLOPES UNTIL FINAL VEGETATIVE OR STONE STABILIZATION.
9. ALL EXCAVATIONS SHALL BE THOROUGHLY SECURED AND STABILIZED ON A DAILY BASIS BY THE CONTRACTOR AT THE COMPLETION OF CONSTRUCTION OPERATIONS.
10. STABILIZE ALL DITCHES, SWALES, AND PONDS PRIOR TO DIRECTING STORMWATER RUNOFF TO THEM.
11. TURF REINFORCEMENT MAT (TRM) SHALL BE INSTALLED ON ALL 3-FT HORIZONTAL TO 1-FT VERTICAL SLOPES (3:1) OR STEEPER, AND BE NORTH AMERICAN GREEN SC250 OR APPROVED EQUAL.
12. EARTHWORK AND COMPACTION SHALL BE IN ACCORDANCE WITH THE RECOMMENDATIONS MADE IN THE GEOTECHNICAL ENGINEERING REPORT BY OTHERS.

STATE OF NEW HAMPSHIRE
BRIAN J. SAKOWICH
No. 14326
LICENSED
PROFESSIONAL ENGINEER

This document has been digitally sealed.
Oct 5 2015

0 30' 60'
SCALE IN FEET

NORTH

**FOR PERMITTING PURPOSES ONLY**
**NOT FOR CONSTRUCTION**

| NO. | REVISION | DATE | DRWN | CHKD | APPRV. |
|---|---|---|---|---|---|
| 1 | ISSUED FOR PERMITTING | 10/1/15 | JJS | RLR | BSS |

THE NORTHERN PASS
Transmission Business

TRANSITION STATION #6
GRADING PLAN

DATE: 10/1/2015
SCALE: 1" = 30'

DES: JJS CHK: RLR
DRW: JJS APR: BSS
TOWN: BRIDGEWATER, NH
TRANSMISSION LINE:
MILE NO:
SHEET 4 OF 20
NPTT904-C101

REVISION: XXX

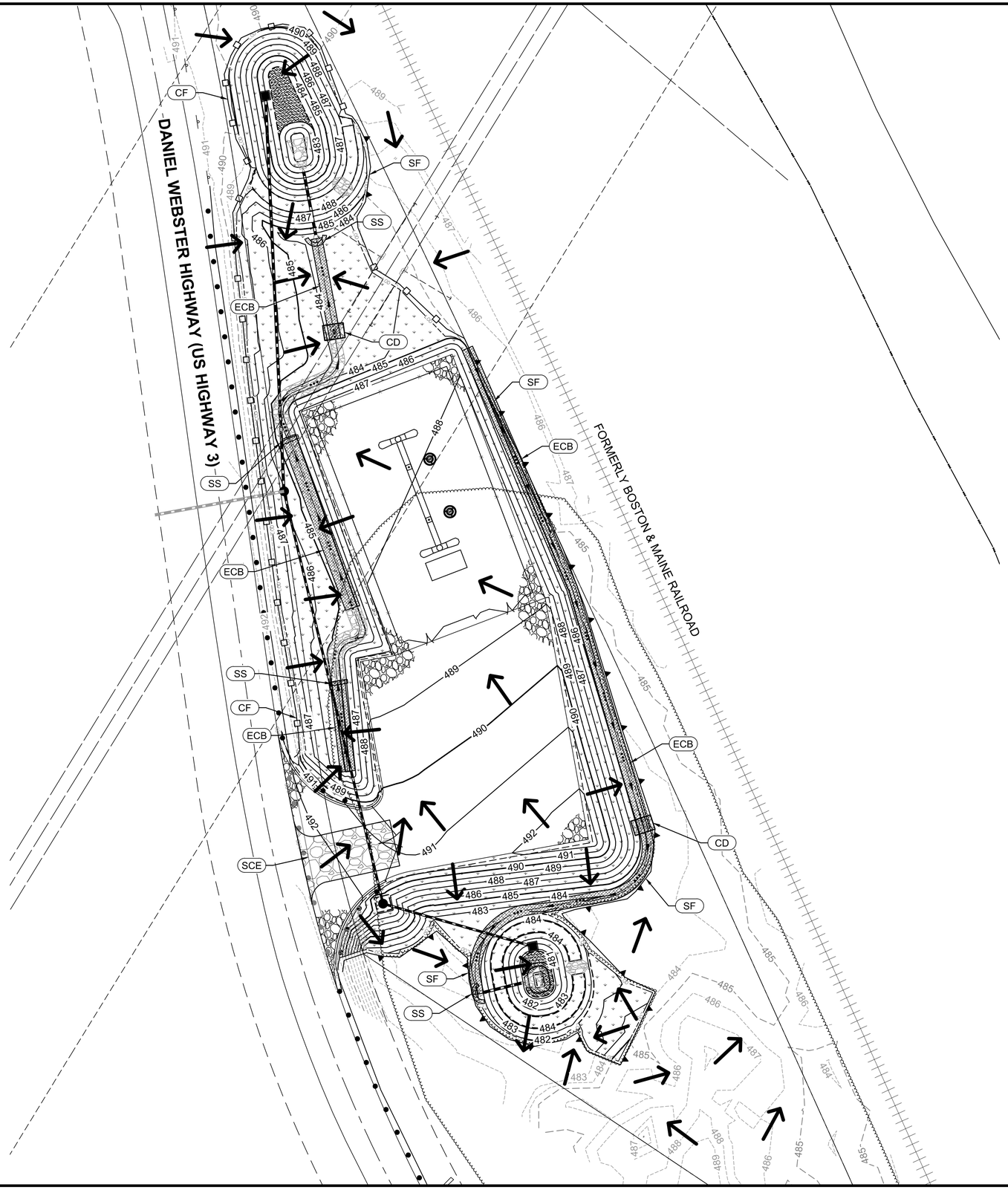


## SEDIMENT & EROSION CONTROL LEGEND

| | |
|---|---|
| | FLOW ARROW |
| 1 / C503 | CONSTRUCTION FENCE (CF) |
| 2 / C501 | STONE CHECK DAM (CD) |
| 5 / C501 | EROSION CONTROL BLANKET (ECB) |
| 4 / C501 | SILT SOCK (SS) |
| 3 / C501 | SILT FENCE (SF) |
| 1 / C501 | STABLIZED CONSTRUCTION ENTRANCE (SCE) |

NOTES:

1. REFER TO SHEET NPTT910-C500 FOR EROSION AND SEDIMENTATION NOTES.
2. TOTAL LIMIT OF DISTURBANCE - 64,894 SF = 1.49 ACRES.

STATE OF NEW HAMPSHIRE
BRIAN S. SANDOWICH
No. 14328
LICENSED
PROFESSIONAL ENGINEER

This document has been digitally sealed.
Oct 5 2015

0 30' 60'
SCALE IN FEET

NORTH

**FOR PERMITTING PURPOSES ONLY**
**NOT FOR CONSTRUCTION**

| NO. | REVISION | DATE | DRWN | CHKD | APPRV. |
|---|---|---|---|---|---|
| 1 | ISSUED FOR PERMITTING | 10/1/15 | JJS | RLR | BSS |

THE NORTHERN PASS
Transmission Business

TRANSITION STATION #6
EROSION AND SEDIMENTATION CONTROL PLAN

DATE: 10/1/2015
SCALE: 1" = 30'

DES: JJS | CHK: RLR
DRW: JJS | APR: BSS
TOWN: BRIDGEWATER, NH
TRANSMISSION LINE:
MILE NO:
SHEET 5 OF 20
NPTT905-C102

REVISION: XXX

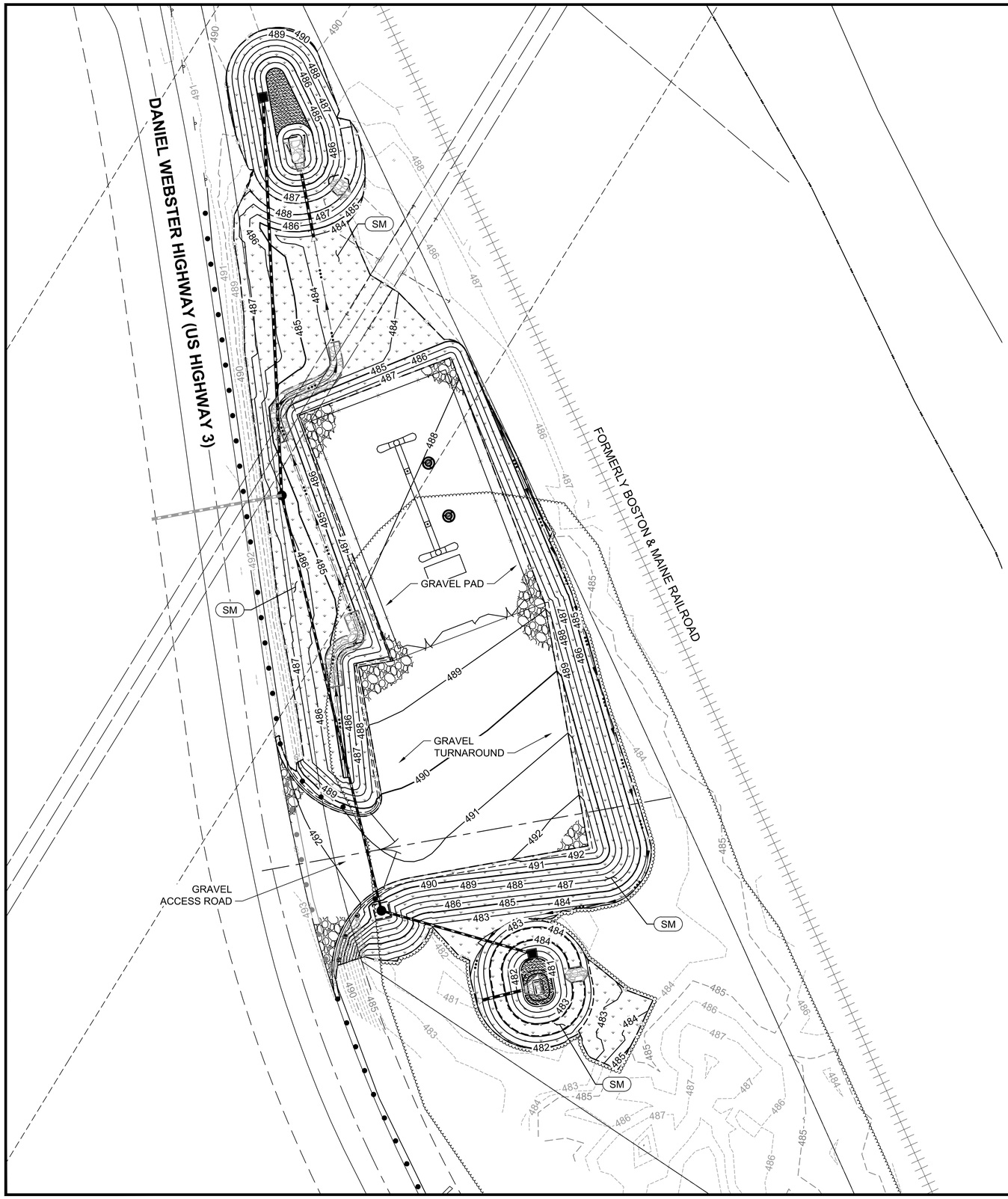


PLANTING PLAN NOTES:

1. REFER TO SHEET NPTT902-G001 FOR ADDITIONAL GENERAL NOTES, ABBREVIATIONS, AND LEGENDS.

2. THIS DRAWING IS INTENDED TO DESCRIBE LANDSCAPE INFORMATION ONLY.

3. ALL DISTURBED AREAS NOT OTHERWISE DEVELOPED SHALL HAVE A MINIMUM OF 4" OF LOAM AND THE FOLLOWING SEED MIXTURE:
   NHDOT TYPE 44 (MIN. 80 LBS/ACRE):
   44% CREEPING RED FESCUE (MIN. 35 LBS/ACRE)
   38% PERENNIAL RYEGRASS (MIN. 30 LBS/ACRE)
   6% REDTOP (MIN. 5 LBS/ACRE)
   6% ALSIKE CLOVER (MIN. 5 LBS/ACRE)
   6% BIRDSFOOT TREFOIL (MIN. 5 LBS/ACRE)
   ALL SEEDING SHALL BE IN ACCORDANCE WITH THE NEW HAMPSHIRE DEPARTMENT OF TRANSPORTATION STANDARD SPECIFICATIONS (2010) SECTION 644 -- GRASS SEED AND THE NEW HAMPSHIRE DEPARTMENT OF ENVIRONMENTAL SERVICES STORMWATER MANUAL VOLUME 3 PERMANENT VEGETATION IN SECTION 4.1.

4. NO SEEDING SHALL BE PLACED BEFORE ROUGH GRADING HAS BEEN PROPERLY COMPLETED.

5. TOPSOIL SHALL BE INSTALLED AT A MINIMUM DEPTH OF 4". CONTRACTOR SHALL SUBMIT SAMPLES FROM EACH PROPOSED TOPSOIL SOURCE TO A CERTIFIED TESTING LABORATORY TO DETERMINE pH, FERTILITY, ORGANIC CONTENT AND MECHANICAL COMPOSITION. CONTRACTOR SHALL SUBMIT THE TEST RESULTS TO OWNER OR LANDSCAPE ARCHITECT FOR REVIEW. CONTRACTOR SHALL INCORPORATE AMENDMENTS FOR PROPER SOIL pH AND PLANT GROWTH AS RECOMMENDED BY TEST REPORTS AT NO INCREASE IN CONTRACT PRICE.

6. TEMPORARY AND PERMANENT SEEDING SHALL SHALL BE IN ACCORDANCE WITH THE PLANTING PLAN, NH DES STORMWATER MANUAL VOLUME 3, AND NH DOT STANDARD SPECIFICATIONS SECTION 644.

7. AREAS WHICH ARE TO BE TOPSOILED SHALL BE SCARIFIED TO A MINIMUM DEPTH OF 3 TO 5 INCHES -- 6 TO 12 INCHES ON COMPACTED SOILS -- PRIOR TO PLACEMENT OF TOPSOIL. AREAS TO BE VEGETATED SHALL HAVE A MINIMUM 4 INCHES OF TOPSOIL IN PLACE PRIOR TO SEEDING AND MULCHING.

8. PLACING LOAM ON SITE: ALL SUBGRADE ELEVATIONS SHOULD BE UNIFORMLY GRADED TO RECEIVE LOAM AND SHALL BE INSPECTED AND APPROVED BY THE GENERAL CONTRACTOR PRIOR TO PLACEMENT OF LOAM. PLACE LOAM TO FORM A MINIMUM DEPTH OF 4" WHEN ROLLED, UNLESS OTHERWISE INDICATED. ALL DEPRESSIONS EXPOSED DURING THE ROLLING SHALL BE FILLED WITH ADDITIONAL LOAM.

9. SEED BED PREPARATION: AFTER FINISH GRADING AND JUST BEFORE SEEDING, THE AREAS TO BE SEEDED SHALL BE LOOSENED TO PROVIDE A ROUGH, FIRM BUT FINELY PULVERIZED SEEDBED. THE INTENT IS A TEXTURE CAPABLE OF RETAINING WATER, SEED AND FERTILIZER WHILE REMAINING STABLE AND ALLOWING SEED TIME TO GERMINATE. SEED SHALL BE APPLIED TO THE CONDITIONED SEEDBED NOT MORE THAN 48 HOURS AFTER THE SEEDBED HAS BEEN PREPARED.

10. LIME AND FERTILIZER SHALL BE INCORPORATED INTO THE SOIL PRIOR TO OR AT THE TIME OF AT THE TIME OF SEEDING. A MINIMUM OF 2 TONS PER ACRE OF AGRICULTURAL LIMESTONE AND 500 LBS. PER ACRE OF 10-20-20 FERTILIZER SHALL BE APPLIED. SEEDING PRACTICES SHALL COMPLY WITH LOCAL USDA SOIL CONSERVATION SERVICES RECOMMENDATIONS.

11. STRAW MULCH OR JUTE MATTING SHALL BE USED WHERE INDICATED ON THE PLANS. A MINIMUM OF 1.5 TONS OF MULCH PER ACRE SHALL BE APPLIED. MULCH SHALL BE ANCHORED IN PLACE WHERE NECESSARY. JUTE MATTING SHALL BE LAID IN THE DIRECTION OF RUNOFF FLOW AND APPLIED IN ACCORDANCE WITH MANUFACTURER'S INSTRUCTIONS.

12. PERMANENT OR TEMPORARY COVER MUST BE IN PLACE BEFORE THE GROWING SEASON ENDS. WHEN SEEDED AREAS ARE MULCHED, PLANTINGS MAY BE MADE FROM EARLY SPRING TO EARLY OCTOBER. WHEN SEEDED AREAS AREA NOT MULCHED, PLANTINGS SHOULD BE MADE FROM EARLY SPRING TO MAY 20 OR FROM AUGUST 15 TO SEPTEMBER 15. NO DISTURBED AREA SHALL BE LEFT EXPOSED DURING WINTER MONTHS.

## PLANTING LEGEND

SEEDING & MULCHING (SM)

**AREA TO BE SEEDED = 0.85 ACRES**

STATE OF NEW HAMPSHIRE
BRIAN J. SAKLOWITCH
No. 14328
LICENSED
PROFESSIONAL ENGINEER

This document has been digitally sealed.
Oct 5 2015

0 30' 60'
SCALE IN FEET

NORTH

**FOR PERMITTING PURPOSES ONLY**
**NOT FOR CONSTRUCTION**

| NO. | REVISION | DATE | DRWN | CHKD | APPRV. |
|---|---|---|---|---|---|
| 1 | ISSUED FOR PERMITTING | 10/1/15 | JJS | RLR | BSS |

Transmission Business
#

TRANSITION STATION #6
PLANTING PLAN

DATE: 10/1/2015
SCALE: 1" = 30'

DES: JJS CHK: RLR
DRW: JJS APR: BSS

TOWN: BRIDGEWATER, NH
TRANSMISSION LINE:
MILE NO:
SHEET 6 OF 20
NPTT906-C103

REVISION: XXX

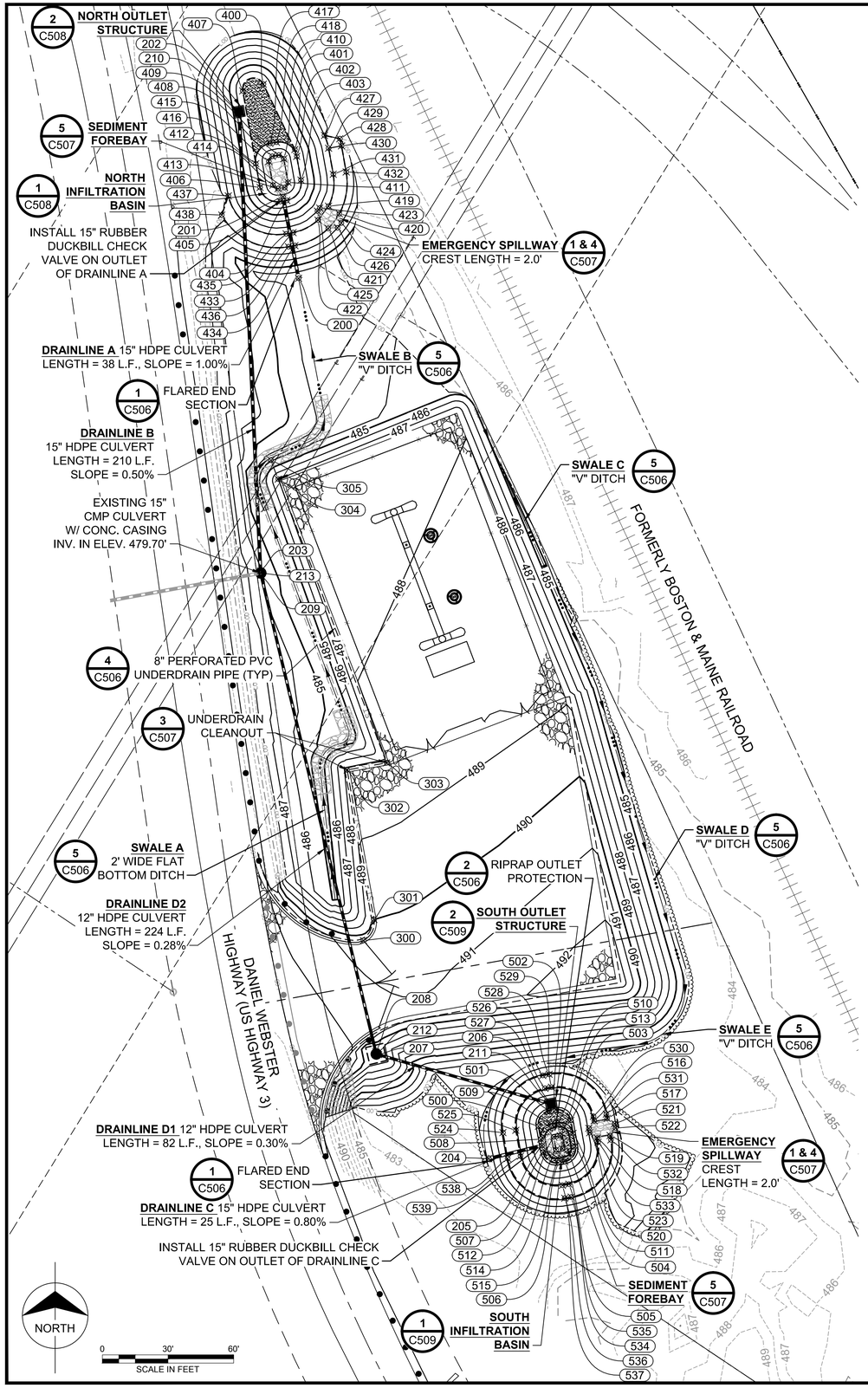


## POINT TABLE

| PNT | NORTHING | EASTING | ELEV. | DESCRIPTION |
|---|---|---|---|---|
| 200 | 441679.55 | 986697.02 | 483.38 | DRAINLINE A - 15" HDPE PIPE INVERT IN (FES) |
| 201 | 441716.88 | 986689.89 | 483.00 | DRAINLINE A - 15" HDPE PIPE INVERT OUT (FES) |
| 202 | 441755.67 | 986669.83 | 480.75 | DRAINLINE B - 15" HDPE PIPE INVERT IN |
| 203 | 441545.90 | 986679.64 | 479.70 | DRAINLINE B - 15" HDPE PIPE INVERT OUT |
| 204 | 441277.28 | 986783.96 | 480.85 | DRAINLINE C - 15" HDPE PIPE INVERT IN |
| 205 | 441283.26 | 986808.23 | 480.65 | DRAINLINE C - 15" HDPE PIPE INVERT OUT |
| 206 | 441302.30 | 986812.44 | 480.58 | DRAINLINE D1 - 12" HDPE PIPE INVERT IN |
| 207 | 441324.81 | 986733.59 | 480.33 | DRAINLINE D1 - 12" HDPE PIPE INVERT OUT |
| 208 | 441326.14 | 986732.27 | 480.33 | DRAINLINE D2 - 12" HDPE PIPE INVERT IN |
| 209 | 441543.93 | 986679.89 | 479.70 | DRAINLINE D2 - 15" HDPE PIPE INVERT OUT |
| 210 | 441755.67 | 986669.77 | 486.41 | POND OUTLET STRUCTURE - GRATE ELEVATION |
| 211 | 441302.30 | 986812.44 | 483.00 | POND OUTLET STRUCTURE - GRATE ELEVATION |
| 212 | 441325.12 | 986732.52 | 489.30 | MANHOLE #1 - COVER ELEVATION |
| 213 | 441544.91 | 986679.76 | 486.50 | MANHOLE #2 - COVER ELEVATION |
| 300 | 441377.01 | 986726.65 | 487.71 | 8" UNDERDRAIN INVERT - BEGINNING PC |
| 301 | 441386.63 | 986731.45 | 487.12 | 8" UNDERDRAIN INVERT - PT |
| 302 | 441454.92 | 986719.20 | 485.28 | 8" UNDERDRAIN INVERT - PI (INSTALL CLEANOUT) |
| 303 | 441458.15 | 986737.23 | 484.92 | 8" UNDERDRAIN INVERT - PI (INSTALL CLEANOUT) |
| 304 | 441587.80 | 986687.68 | 483.99 | 8" UNDERDRAIN INVERT - PVI |
| 305 | 441596.40 | 986684.39 | 483.87 | 8" UNDERDRAIN INVERT - OUTLET |
| 400 | 441768.26 | 986680.92 | 483.00 | BOTTOM OF NORTH DETENTION POND - PT |
| 401 | 441738.43 | 986695.30 | 483.00 | BOTTOM OF NORTH DETENTION POND - PC |
| 402 | 441735.28 | 986696.17 | 483.00 | BOTTOM OF NORTH DETENTION POND - PT |
| 403 | 441724.45 | 986698.11 | 483.00 | BOTTOM OF NORTH DETENTION POND - PC |
| 404 | 441715.16 | 986691.65 | 483.00 | BOTTOM OF NORTH DETENTION POND - PT |
| 405 | 441714.63 | 986688.69 | 483.00 | BOTTOM OF NORTH DETENTION POND - PC |
| 406 | 441721.09 | 986679.41 | 483.00 | BOTTOM OF NORTH DETENTION POND - PT |
| 407 | 441765.20 | 986671.50 | 483.00 | BOTTOM OF NORTH DETENTION POND - PC |
| 408 | 441735.30 | 986684.99 | 481.00 | BOTTOM OF NORTH SEDIMENT FOREBAY - PI |
| 409 | 441735.83 | 986687.94 | 481.00 | BOTTOM OF NORTH SEDIMENT FOREBAY - PI |
| 410 | 441734.22 | 986690.26 | 481.00 | BOTTOM OF NORTH SEDIMENT FOREBAY - PI |
| 411 | 441723.39 | 986692.20 | 481.00 | BOTTOM OF NORTH SEDIMENT FOREBAY - PI |
| 412 | 441721.07 | 986690.59 | 481.00 | BOTTOM OF NORTH SEDIMENT FOREBAY - PI |
| 413 | 441720.54 | 986687.64 | 481.00 | BOTTOM OF NORTH SEDIMENT FOREBAY - PI |
| 414 | 441722.15 | 986685.31 | 481.00 | BOTTOM OF NORTH SEDIMENT FOREBAY - PI |
| 415 | 441732.98 | 986683.37 | 481.00 | BOTTOM OF NORTH SEDIMENT FOREBAY - PI |
| 416 | 441731.92 | 986677.47 | 483.00 | TOP OF NORTH SEDIMENT FOREBAY SLOPE - PC |
| 417 | 441741.21 | 986683.93 | 483.00 | TOP OF NORTH SEDIMENT FOREBAY SLOPE - PT |
| 418 | 441741.74 | 986686.88 | 483.00 | TOP OF NORTH SEDIMENT FOREBAY SLOPE - PT |
| 419 | 441712.51 | 986710.69 | 488.00 | TOP OF NORTH SPILLWAY - PI |
| 420 | 441709.07 | 986715.65 | 488.00 | TOP OF NORTH SPILLWAY - PI |
| 421 | 441702.31 | 986710.52 | 488.00 | TOP OF NORTH SPILLWAY - PI |
| 422 | 441706.17 | 986705.87 | 488.00 | TOP OF NORTH SPILLWAY - PI |
| 423 | 441711.65 | 986706.68 | 487.00 | BOTTOM OF NORTH SPILLWAY SLOPE - PI |
| 424 | 441704.81 | 986716.54 | 487.00 | BOTTOM OF NORTH SPILLWAY SLOPE - PI |
| 425 | 441710.26 | 986705.62 | 487.00 | BOTTOM OF NORTH SPILLWAY SLOPE - PI |
| 426 | 441702.60 | 986714.86 | 487.00 | BOTTOM OF NORTH SPILWAY SLOPE - PI |
| 427 | 441744.86 | 986708.86 | 488.00 | TOP OF NORTH BERM - BEGINNING |
| 428 | 441743.33 | 986715.86 | 488.00 | TOP OF NORTH BERM - BEGINNING |
| 429 | 441739.01 | 986710.74 | 488.00 | TOP OF NORTH BERM - PI |
| 430 | 441740.07 | 986716.64 | 488.00 | TOP OF NORTH BERM - PI |
| 431 | 441727.10 | 986712.87 | 488.00 | TOP OF NORTH BERM - PC |
| 432 | 441728.15 | 986718.78 | 488.00 | TOP OF NORTH BERM - PC |
| 433 | 441700.44 | 986694.53 | 488.00 | TOP OF NORTH BERM - PT |
| 434 | 441694.49 | 986695.35 | 488.00 | TOP OF NORTH BERM - PT |
| 435 | 441699.87 | 986691.34 | 488.00 | TOP OF NORTH BERM - PC |
| 436 | 441693.96 | 986692.40 | 488.00 | TOP OF NORTH BERM - PC |
| 437 | 441717.20 | 986664.90 | 488.00 | TOP OF NORTH BERM - PT END |
| 438 | 441708.45 | 986661.92 | 488.00 | TOP OF NORTH BERM - PT END |
| 500 | 441292.12 | 986806.64 | 480.65 | BOTTOM OF SOUTH DETENTION POND - PT |
| 501 | 441299.08 | 986811.49 | 480.65 | BOTTOM OF SOUTH DETENTION POND - PC |
| 502 | 441299.61 | 986814.44 | 480.65 | BOTTOM OF SOUTH DETENTION POND - PT |
| 503 | 441294.76 | 986821.41 | 480.65 | BOTTOM OF SOUTH DETENTION POND - PT |
| 504 | 441282.95 | 986823.53 | 480.65 | BOTTOM OF SOUTH DETENTION POND - PC |
| 505 | 441275.99 | 986818.68 | 480.65 | BOTTOM OF SOUTH DETENTION POND - PT |
| 506 | 441275.46 | 986815.73 | 480.65 | BOTTOM OF SOUTH DETENTION POND - PT |
| 507 | 441280.30 | 986808.76 | 480.65 | BOTTOM OF SOUTH DETENTION POND - PC |
| 508 | 441286.21 | 986807.70 | 480.65 | TOP OF SOUTH SEDIMENT FOREBAY SLOPE - PT |
| 509 | 441293.18 | 986812.55 | 480.65 | TOP OF SOUTH SEDIMENT FOREBAY SLOPE - PT |

## POINT TABLE

| PNT | NORTHING | EASTING | ELEV. | DESCRIPTION |
|---|---|---|---|---|
| 510 | 441293.70 | 986815.50 | 480.65 | TOP OF SOUTH SEDIMENT FOREBAY SLOPE - PC |
| 511 | 441288.86 | 986822.47 | 480.65 | TOP OF SOUTH SEDIMENT FOREBAY SLOPE - PC |
| 512 | 441287.27 | 986813.61 | 478.65 | BOTTOM OF SOUTH SEDIMENT FOREBAY - PI |
| 513 | 441287.80 | 986816.56 | 478.65 | BOTTOM OF SOUTH SEDIMENT FOREBAY - PI |
| 514 | 441281.36 | 986814.67 | 478.65 | BOTTOM OF SOUTH SEDIMENT FOREBAY - PI |
| 515 | 441281.89 | 986817.62 | 478.65 | BOTTOM OF SOUTH SEDIMENT FOREBAY - PI |
| 516 | 441294.65 | 986832.10 | 484.15 | TOP OF SOUTH SPILLWAY - PI |
| 517 | 441295.71 | 986838.00 | 484.15 | TOP OF SOUTH SPILLWAY - PI |
| 518 | 441286.77 | 986833.51 | 484.15 | TOP OF SOUTH SPILLWAY - PI |
| 519 | 441287.83 | 986839.41 | 484.15 | TOP OF SOUTH SPILLWAY - PI |
| 520 | 441291.17 | 986829.67 | 483.15 | BOTTOM OF SOUTH SPILLWAY SLOPE - PI |
| 521 | 441293.28 | 986841.48 | 483.15 | BOTTOM OF SOUTH SPILLWAY SLOPE - PI |
| 522 | 441291.32 | 986841.84 | 483.15 | BOTTOM OF SOUTH SPILLWAY SLOPE - PI |
| 523 | 441289.20 | 986830.03 | 483.15 | BOTTOM OF SOUTH SPILLWAY SLOPE - PI |
| 524 | 441289.20 | 986790.40 | 484.15 | TOP OF SOUTH BERM - PC |
| 525 | 441290.26 | 986796.31 | 484.15 | TOP OF SOUTH BERM - PC |
| 526 | 441315.32 | 986808.58 | 484.15 | TOP OF SOUTH BERM - PT |
| 527 | 441309.42 | 986809.64 | 484.15 | TOP OF SOUTH BERM - PT |
| 528 | 441315.85 | 986811.53 | 484.15 | TOP OF SOUTH BERM - PC |
| 529 | 441309.95 | 986812.59 | 484.15 | TOP OF SOUTH BERM - PC |
| 530 | 441296.62 | 986831.74 | 484.15 | TOP OF SOUTH BERM - PT |
| 531 | 441297.68 | 986837.65 | 484.15 | TOP OF SOUTH BERM - PT |
| 532 | 441285.86 | 986839.77 | 484.15 | TOP OF SOUTH BERM - PC |
| 533 | 441284.81 | 986833.86 | 484.15 | TOP OF SOUTH BERM - PC |
| 534 | 441259.75 | 986821.59 | 484.15 | TOP OF SOUTH BERM - PT |
| 535 | 441265.65 | 986820.53 | 484.15 | TOP OF SOUTH BERM - PT |
| 536 | 441259.22 | 986818.64 | 484.15 | TOP OF SOUTH BERM - PC |
| 537 | 441265.12 | 986817.58 | 484.15 | TOP OF SOUTH BERM - PC |
| 538 | 441277.39 | 986792.52 | 484.15 | TOP OF SOUTH BERM - PT |
| 539 | 441278.45 | 986798.43 | 484.15 | TOP OF SOUTH BERM - PT |

STORMWATER SYSTEM PLAN NOTES:

1. REFER TO SHEET NPTT902-G001 FOR ADDITIONAL GENERAL NOTES, ABBREVIATIONS, AND LEGENDS.
2. THIS DRAWING IS INTENDED TO DESCRIBE THE STORMWATER SYSTEM ONLY.
3. NEW HAMPSHIRE STATE PLANE COORDINATE SYSTEM
   HORIZONTAL DATUM - NAD83
   VERTICAL DATUM - NAVD88
4. STORM DRAINAGE SYSTEM CONNECTIONS, MATERIALS, AND METHODS SHALL BE IN ACCORDANCE WITH THE NH DOT STANDARDS AND NH DOT SPECIFICATION SECTIONS 603 AND 604, AS WELL AS OTHER APPLICABLE INDUSTRY CODES AND GOVERNING AGENCY REQUIREMENTS.
5. THE CONTRACTOR SHALL VISIT THE SITE AND VERIFY THE ELEVATION AND LOCATION OF ALL UTILITIES BY VARIOUS MEANS PRIOR TO BEGINNING ANY EXCAVATION. TEST PITS SHALL BE DUG AT ALL LOCATIONS WHERE PROPOSED STORM PIPING WILL CROSS EXISTING UTILITIES, AND THE HORIZONTAL AND VERTICAL LOCATIONS OF THE UTILITIES SHALL BE DETERMINED. THE CONTRACTOR SHALL CONTACT THE ENGINEER IN THE EVENT OF ANY DISCOVERED OR UNFORESEEN CONFLICTS BETWEEN EXISTING AND PROPOSED SANITARY SEWERS, STORM PIPING AND UTILITIES SO THAT AN APPROPRIATE MODIFICATION MAY BE MADE.
6. MANHOLE RIMS AND CATCH BASIN GRATES SHALL BE SET TO ELEVATIONS SHOWN. SET ALL EXISTING MANHOLE RIMS, GRATES AND OTHER UTILITY TOPS TO BE RAISED OR LOWERED FLUSH WITH FINAL GRADE AS NECESSARY.
7. THE CONTRACTOR SHALL ARRANGE FOR AND COORDINATE WITH APPLICABLE REGULATORY AGENCIES FOR STORM DRAINAGE INSTALLATIONS AND CONNECTIONS.
8. THE CONTRACTOR SHALL COORDINATE WORK TO BE PERFORMED BY THE VARIOUS UTILITY PROVIDERS AND SHALL PAY ALL FEES FOR CONNECTIONS, DISCONNECTIONS, RELOCATIONS, INSPECTIONS, AND DEMOLITION UNLESS OTHERWISE STATED IN THE PROJECT SPECIFICATIONS MANUAL AND/OR GENERAL CONDITIONS OF THE CONTRACT.
9. ALL PIPES SHALL BE LAID ON STRAIGHT ALIGNMENTS AND EVEN GRADES USING A PIPE LASER OR OTHER ACCURATE METHOD.
10. ALL UTILITY CONSTRUCTION IS SUBJECT TO INSPECTION FOR APPROVAL PRIOR TO BACKFILLING, IN ACCORDANCE WITH THE APPROPRIATE OWNER, UTILITY PROVIDER, AND APPLICABLE REGULATORY AGENCY REQUIREMENTS.
11. A ONE-FOOT MINIMUM VERTICAL CLEARANCE BETWEEN ELECTRICAL AND TELEPHONE LINES TO STORM PIPING SHALL BE PROVIDED.
12. SITE CONTRACTOR SHALL PROVIDE ALL BENDS, FITTINGS, ADAPTERS, ETC., AS REQUIRED FOR PIPE CONNECTIONS.
13. THE CONTRACTOR SHALL MAINTAIN ALL FLOWS AND UTILITY CONNECTIONS WITHOUT INTERRUPTION UNLESS/UNTIL AUTHORIZED BY THE OWNER, THE ENGINEER, UTILITY PROVIDERS AND GOVERNING AUTHORITIES.
14. STORM DRAINAGE SHALL BE RATED FOR HS-20 LOADING.
15. PROVIDE MINIMUM 1% SLOPE ON ALL UNDERDRAINS. ADDITIONAL UNDERDRAINS MAY BE REQUIRED AS DEEMED NECESSARY BY THE OWNER, GEOTECHNICAL ENGINEER AND/OR ENGINEER BASED ON FINDINGS AFTER EARTHWORK AND EXCAVATION OPERATIONS COMMENCE. PROVIDE UNDERDRAIN CLEANOUTS AT A MINIMUM OF EVERY 200' OF PIPE OR ONE CLEANOUT PER PIPE RUN WHERE THE PIPE RUN IS LESS THAN 200'.

STATE OF NEW HAMPSHIRE BRIAN J. SANDOVICH No. 14326 LICENSED PROFESSIONAL ENGINEER

This document has been digitally sealed. Oct 5 2015

**FOR PERMITTING PURPOSES ONLY NOT FOR CONSTRUCTION**

| NO. | REVISION | DATE | DRWN | CHKD | APPRV. |
|---|---|---|---|---|---|
| 1 | ISSUED FOR PERMITTING | 10/1/15 | JJS | RLR | BSS |

THE NORTHERN PASS

Transmission Business

TRANSITION STATION #6 STORMWATER SYSTEM PLAN

DATE: 10/1/2015

SCALE: 1" = 30'

DES: JJS CHK: RLR
DRW: JJS APR: BSS

TOWN: BRIDGEWATER, NH

TRANSMISSION LINE:

MILE NO:

SHEET 7 OF 20

NPTT907-C104

REVISION: XXX

ACCESS ROAD PROFILE NOTES:

1. REFER TO SHEET NPTT902-G001 FOR ADDITIONAL GENERAL NOTES, ABBREVIATIONS, AND LEGENDS.
2. THIS DRAWING IS INTENDED TO DESCRIBE THE STATION ACCESS ROAD GEOMETRY ONLY.
3. NEW HAMPSHIRE STATE PLANE COORDINATE SYSTEM
   HORIZONTAL DATUM - NAD83
   VERTICAL DATUM - NAVD88
4. PROPOSED CONTOURS AND SPOT ELEVATIONS INDICATED REFER TO TOP OF FINISH SURFACE.

# ACCESS ROAD PROFILE

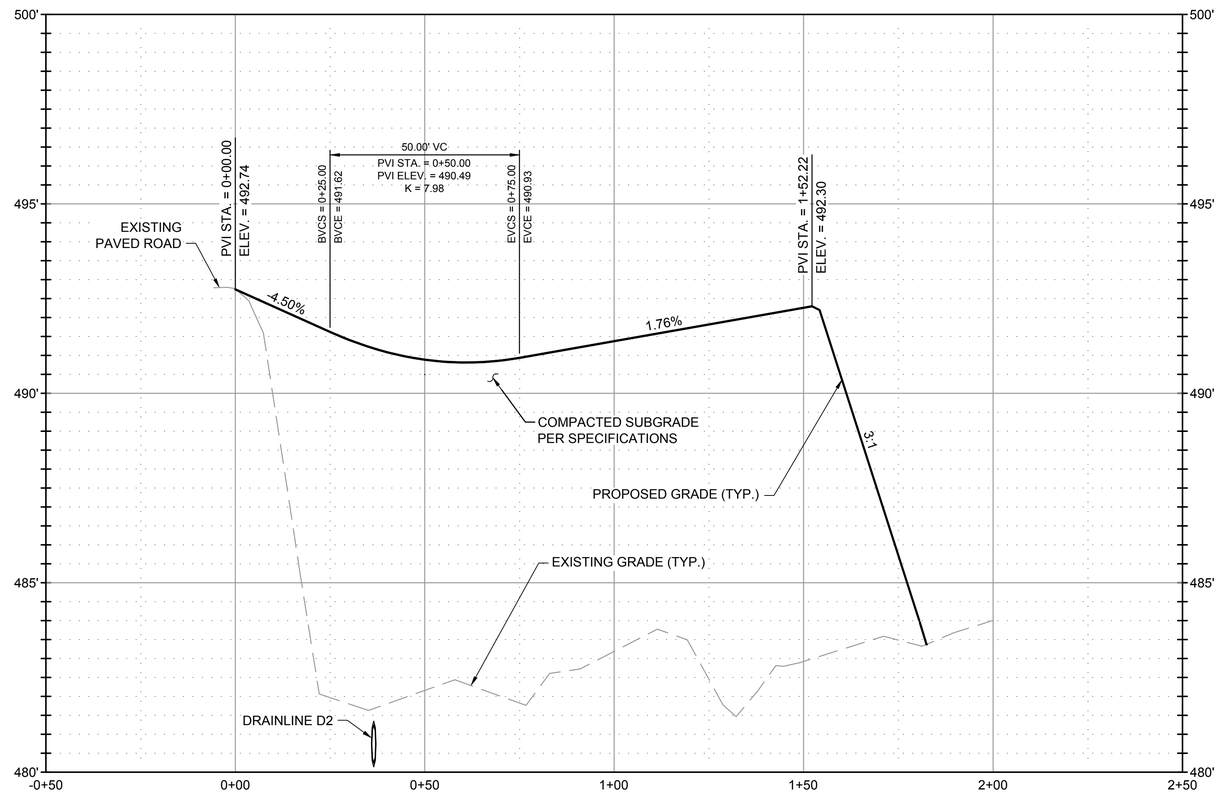



This document has been digitally sealed.
Oct 5 2015

HORIZONTAL
0 10' 20' 40'
SCALE IN FEET

VERTICAL
0 2' 4'
SCALE IN FEET

**FOR PERMITTING PURPOSES ONLY**
**NOT FOR CONSTRUCTION**

| NO. | REVISION | DATE | DRWN | CHKD | APPRV. |
|---|---|---|---|---|---|
| 1 | ISSUED FOR PERMITTING | 10/1/15 | JJS | RLR | BSS |

THE NORTHERN PASS
Transmission Business

TRANSITION STATION #6
ACCESS ROAD PROFILE

DATE: 10/1/2015
SCALE: AS NOTED

DES: JJS | CHK: RLR
DRW: JJS | APR: BSS
TOWN: BRIDGEWATER, NH
TRANSMISSION LINE:
MILE NO:
SHEET 8 OF 20
NPTT908-C200

REVISION: XXX

Z:\CLIENTS\TND\NUSC\58466_NPT\DESIGN\SUBSTATION\900-TRANSITION_STATION-6\CADD\NPTT908-C200.DWG 10/5/2015 8:21 AM BSAKIDOVITCH

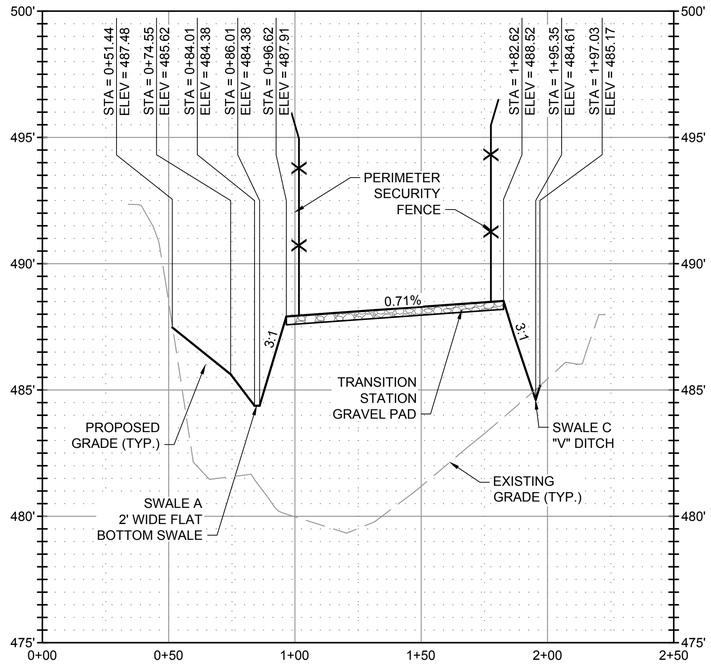


CROSS SECTION A-A

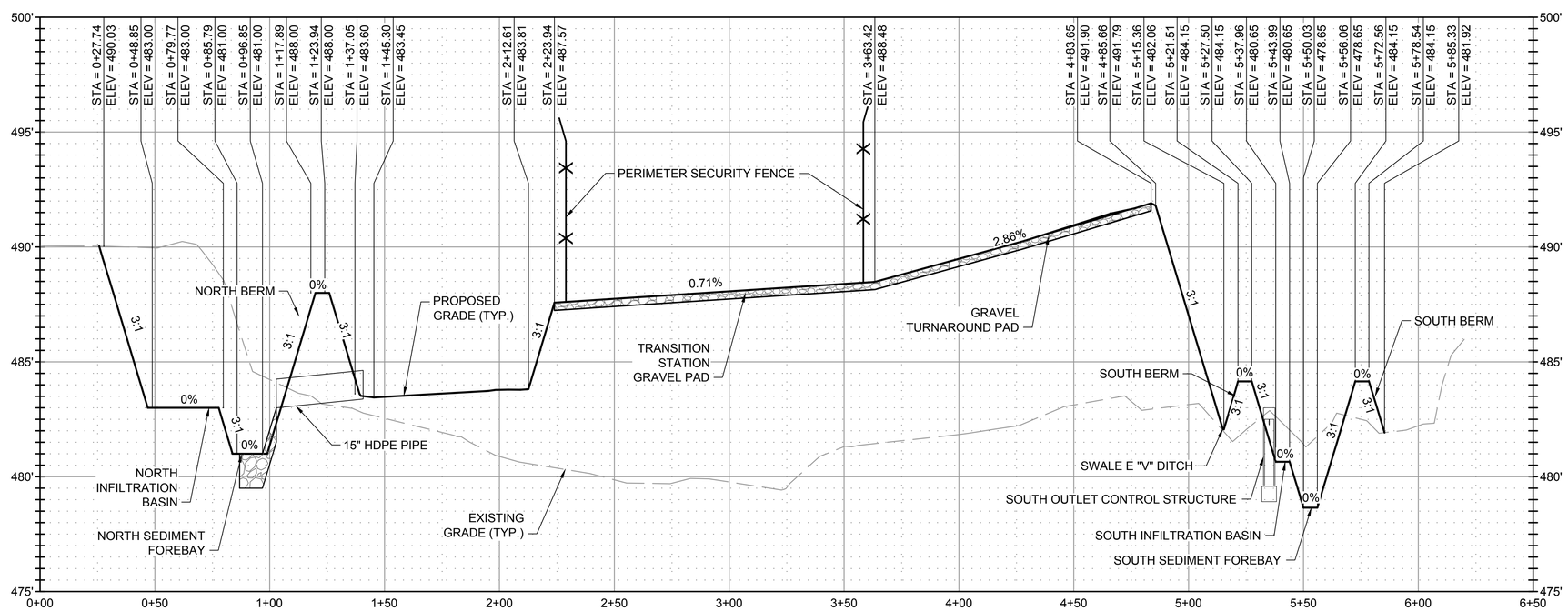


CROSS SECTION B-B

GRADING CROSS SECTION NOTES:

1. REFER TO SHEET NPTT902-G001 FOR ADDITIONAL GENERAL NOTES, ABBREVIATIONS, AND LEGENDS.
2. THIS DRAWING IS INTENDED TO DESCRIBE THE GRADING CROSS SECTIONS ONLY.
3. NEW HAMPSHIRE STATE PLANE COORDINATE SYSTEM
   HORIZONTAL DATUM - NAD83
   VERTICAL DATUM - NAVD88
4. PROPOSED CONTOURS AND SPOT ELEVATIONS INDICATED REFER TO TOP OF FINISH SURFACE.
5. CONTRACTOR SHALL PLACE 4" TOPSOIL AND SEED ON ALL CUT AND FILL SLOPES AS SPECIFIED UNLESS ANOTHER SURFACE MATERIAL IS INDIC
6. EARTHWORK AND COMPACTION SHALL BE IN ACCORDANCE WITH THE RECOMMENDATIONS MADE IN THE GEOTECHNICAL ENGINEERING RECOMMENDATIONS REPORT BY OTHERS.
7. STRIP AND STOCKPILE EXISTING TOPSOIL IN AREAS OF PROPOSED GRADING AND EARTHWORK.

STATE OF NEW HAMPSHIRE
BRIAN J. SAKIDOVITCH
No. 14328
LICENSED
PROFESSIONAL ENGINEER

This document has been digitally sealed.
Oct 5 2015

HORIZONTAL
0 30' 60'
SCALE IN FEET

VERTICAL
0 3' 6'
SCALE IN FEET

**FOR PERMITTING PURPOSES ONLY**
**NOT FOR CONSTRUCTION**

| NO. | REVISION | DATE | DRWN | CHKD | APPRV. |
|---|---|---|---|---|---|
| 1 | ISSUED FOR PERMITTING | 10/1/15 | JJS | RLR | BSS |

THE NORTHERN PASS
Transmission Business

TRANSITION STATION #6
SITE CROSS SECTIONS

DATE: 10/1/2015
SCALE: AS NOTED

DES: JJS | CHK: RLR
DRW: JJS | APR: BSS
TOWN: BRIDGEWATER, NH
TRANSMISSION LINE:
MILE NO:
SHEET 9 OF 20
NPTT909-C300

REVISION: XXX

Z:\CLIENTS\TND\NUSC\58466_NPT\DESIGN\SUBSTATION\900-TRANSITION_STATION-6\CADD\NPTT909-C300.DWG 10/5/2015 8:19 AM BSAKIDOVITCH

## EROSION AND SEDIMENTATION CONTROL GENERAL NOTES:

1. THE SEDIMENT AND EROSION CONTROL PLAN IS ONLY INTENDED TO DESCRIBE THE SEDIMENT AND EROSION CONTROL TREATMENT FOR THIS SITE. SEE SEDIMENT AND EROSION CONTROL DETAILS AND CONSTRUCTION SEQUENCE. REFER TO SITE PLAN FOR GENERAL INFORMATION AND OTHER CONTRACT PLANS FOR APPROPRIATE INFORMATION.

2. CONSTRUCTION ACTIVITIES SHALL PROCEED IN ACCORDANCE WITH THE GENERAL NOTES, SEQUENCE PROVIDED ON THE PLAN DRAWINGS. DEVIATION FROM THAT SEQUENCE MUST BE APPROVED IN WRITING BY THE OWNER, QUALIFIED PROFESSIONAL, AND APPROPRIATE REGULATORY AGENCY PRIOR TO IMPLEMENTATION.

3. THE EROSION AND SEDIMENTATION CONTROL MEASURES, CONSTRUCTION SEQUENCE AND PHASING IS THE MINIMUM RECOMMENDED. THE CONTRACTOR SHALL INSTALL AND MAINTAIN ADDITIONAL MEASURES AND SEQUENCING AS REQUIRED BASED ON ACTUAL FIELD OPERATIONS AND CONDITIONS AND BE CONSISTENT WITH THE NEW HAMPSHIRE STORMWATER MANUAL. SIGNIFICANT ADDITIONS AND/OR MODIFICATIONS FROM THE PLANS SHALL BE SUBMITTED, REVIEWED AND APPROVED BY THE OWNER, QUALIFIED PROFESSIONAL AND APPLICABLE REGULATORY AGENCIES.

4. THE SEDIMENT AND EROSION CONTROL PLAN WAS DEVELOPED TO HELP PROTECT THE EXISTING ROADWAY AND STORM DRAINAGE SYSTEMS, ADJACENT PROPERTIES, AND ADJACENT WETLAND AREA FROM SEDIMENT LADEN SURFACE RUNOFF AND EROSION.

5. APPROPRIATE EROSION/SEDIMENT CONTROL MEASURES AS DESCRIBED HEREIN, SHALL BE INSTALLED BY THE CONTRACTOR PRIOR TO THE COMMENCEMENT OF ALL CLEARING, DEMOLITION AND CONSTRUCTION ACTIVITY WITHIN THE APPROVED LIMITS OF DISTURBANCE. SCHEDULE WORK TO MINIMIZE THE LENGTH OF TIME THAT BARE SOIL WILL BE EXPOSED. CONTRACTOR SHALL ONLY EXCAVATE AS MUCH UTILITY AND STORM PIPE TRENCH WORK AS CAN BE COMPLETED, BACKFILLED AND STABILIZED IN ONE DAY SO AS TO LIMIT THE AMOUNT OF OPEN, DISTURBED TRENCHING. THE SMALLEST PRACTICAL AREA SHALL BE DISTURBED DURING CONSTRUCTION, BUT IN NO CASE SHALL EXCEED 5 ACRES AT ANY ONE TIME BEFORE DISTURBED AREAS ARE STABILIZED.

6. THE CONTRACTOR SHALL INSTALL ALL SPECIFIED EROSION/SEDIMENT CONTROL MEASURES AND WILL BE REQUIRED TO MAINTAIN THEM IN THEIR INTENDED FUNCTIONING CONDITION AND BE IN STRICT CONFORMANCE WITH THE STANDARDS BELOW. THE CONTRACTOR SHALL SUPPLY AND MAINTAIN THESE STANDARDS AND HAVE THEM AVAILABLE ONSITE FOR THE DURATION OF CONSTRUCTION. THE OWNER, AGENTS OF THE REGULATORY AGENCIES AND/OR QUALIFIED PROFESSIONAL SHALL HAVE THE AUTHORITY TO REQUIRE SUPPLEMENTAL MAINTENANCE OR ADDITIONAL MEASURES IF FIELD CONDITIONS ARE ENCOUNTERED BEYOND WHAT WOULD NORMALLY BE ANTICIPATED.
   - A. EVERSOURCE BEST MANAGEMENT PRACTICES MANUAL (TO BE FURTHER DEVELOPED).
   - B. NEW HAMPSHIRE DEPARTMENT OF ENVIRONMENTAL SERVICES STORMWATER MANUAL, DECEMBER 2008.

7. IMMEDIATELY UPON DISCOVERING UNFORESEEN CIRCUMSTANCES POSING THE POTENTIAL FOR ACCELERATED EROSION AND/OR SEDIMENT POLLUTION, THE CONTRACTOR SHALL IMPLEMENT APPROPRIATE BEST MANAGEMENT PRACTICES TO ELIMINATE THE POTENTIAL FOR ACCELERATED EROSION AND/OR SEDIMENT POLLUTION.

8. THE CONTRACTOR SHALL KEEP A SUPPLY OF EROSION CONTROL MATERIAL (STRAW BALES, SILT FENCE, JUTE MESH,RIP RAP ETC.) ON-SITE FOR MAINTENANCE AND EMERGENCY REPAIRS.

9. STONE CONSTRUCTION ENTRANCE/EXIT SHALL BE INSTALLED AT START OF CONSTRUCTION AND MAINTAINED THROUGHOUT THE DURATION OF CONSTRUCTION. THE LOCATION OF THE TRACKING PADS MAY CHANGE AS VARIOUS PHASES OF CONSTRUCTION ARE COMPLETED.

10. TOPSOIL SHALL BE STRIPPED AND STOCKPILED FOR USE IN FINAL LANDSCAPING. ALL EARTH STOCKPILES SHALL HAVE STRAW BALES OR SILT FENCE AROUND THE LIMIT OF PILE. PILES SHALL BE TEMPORARILY SEEDED IF PILE IS TO REMAIN IN PLACE FOR MORE THAN 2 MONTHS.

11. COMPLY WITH REQUIREMENTS OF THE EPA FOR NPDES AND RECORD KEEPING.

12. VISUAL SITE INSPECTIONS SHALL BE CONDUCTED WEEKLY, AND AFTER EACH MEASURABLE PRECIPITATION EVENT OF 0.50 INCHES OR GREATER BY QUALIFIED PERSONNEL, TRAINED AND EXPERIENCED IN EROSION AND SEDIMENT CONTROL, TO ASCERTAIN THAT THE EROSION AND SEDIMENT CONTROL (E&S) BMPS ARE OPERATIONAL AND EFFECTIVE IN PREVENTING POLLUTION. PROVIDE WRITTEN REPORTS IN ACCORDANCE WITH ANY APPLICABLE OWNER, QUALIFIED PROFESSIONAL, AND/OR REGULATORY AGENCY REQUIREMENTS.

13. STOCKPILES OF EARTH MATERIALS SHALL CONFORM TO SOIL STOCKPILE PRACTICES IN SECTION 4.1 OF THE NH DES STORMWATER MANUAL VOLUME 3.

14. DEWATERING SUMP PITS SHALL BE INSTALLED WHEN WATER COLLECTS DURING DURING EXCAVATION TO TRAP AND FILTER WATER FOR PUMPING INTO A SUITABLE DISCHARGE AREA. A PERFORATED VERTICAL STANDPIPE WRAPPED IN NON-WOVEN FILTER FABRIC IS PLACED IN THE CENTER OF THE PIT TO COLLECT FILTERED WATER WHERE IT IS THEN REMOVED FROM THE SUMP PIT IN AN AUTHORIZED MANNER. UNDER NO CIRCUMSTANCES SHALL DEWATERING DRAINAGE BE DISCHARGED INTO A SANITARY SEWER. CONSTRUCTION DEWATERING SHALL CONFORM TO CONSTRUCTION DEWATERING REQUIREMENTS OF THE NH DES STORMWATER MANUAL VOLUME 3 SECTION 4.2.

15. WATER SHALL BE USED FOR DUST CONTROL IN APPROPRIATE AREAS.

16. ALL REGULATORY AGENCY PERMITS REQUIRED FOR THE SITE SHALL BE OBTAINED PRIOR TO SITE WORK COMMENCES.

17. ALL OFF-SITE WASTE AND BORROW AREAS MUST HAVE AN E&S PLAN APPROVED BY THE LOCAL CONSERVATION DISTRICT OR THE DEPARTMENT FULLY IMPLEMENTED PRIOR TO BEING ACTIVATED.

18. E&S BMPS SHALL REMAIN FUNCTIONAL AS SUCH UNTIL ALL AREAS TRIBUTARY TO THEM ARE PERMANENTLY STABILIZED OR UNTIL THEY ARE REPLACED BY ANOTHER BMP APPROVED BY THE LOCAL CONSERVATION DISTRICT OR THE DEPARTMENT.

19. MAXIMUM SLOPES SHALL NOT EXCEED 3-FT HORIZONTAL TO 1-FT VERTICAL (3:1), UNLESS OTHERWISE NOTED. THE CONTRACTOR SHALL VERIFY SLOPE STABILITY OF ALL SLOPES PRIOR TO CONSTRUCTION. UNSTABLE SLOPES SHALL BE LAID BACK (FLATTENED) UNTIL STABLE OR PROVIDE REINFORCING TO ACHIEVE STABILIZATION. SLOPE BENCHES SHALL BE IN ACCORDANCE WITH THE NHDES STORMWATER MANUAL.

20. THE CONTRACTOR SHALL MAINTAIN EMERGENCY ACCESS TO ALL AREAS AFFECTED BY HIS WORK AT ALL TIMES.

21. TEMPORARY AND PERMANENT SEEDING SHALL SHALL BE IN ACCORDANCE WITH THE PLANTING PLAN, NH DES STORMWATER MANUAL VOLUME 3, AND NH DOT STANDARD SPECIFICATIONS SECTION 644.

## ALTERATION OF TERRAIN STANDARD NOTES:

1. THE PROJECT IS TO BE MANAGED IN A MANNER THAT MEETS THE REQUIREMENTS AND INTENT OF RSA 430:53 AND CHAPTER AGR 3800 RELATIVE TO INVASIVE SPECIES.

2. PERIMETER CONTROLS SHALL BE INSTALLED PRIOR TO EARTH MOVING OPERATIONS. INSTALL TEMPORARY EROSION AND SEDIMENT CONTROL DEVICES AS NECESSARY PRIOR TO FURTHER EARTH MOVING OPERATIONS. PREVENTION OF EROSION AND SEDIMENT TRANSPORTATION ISSUES WILL BE FACILITATED BY THE PROMPT EMPLOYMENT OF EFFECTIVE TEMPORARY AND PERMANENT CONTROL DEVICES, AS CONDITIONS WARRANT. ADDITIONAL CONTROL DEVICES THAT ARE DETERMINED NECESSARY, NOT OUTLINED HEREIN, MAY BE INSTALLED BY THE OWNER OR OPERATOR.

3. PONDS AND SWALES SHALL BE INSTALLED EARLY ON IN THE CONSTRUCTION SEQUENCE PRIOR TO ROUGH GRADING THE SITE AND OTHER EARTH MOVING ACTIVITIES.

4. DITCHES AND SWALES SHALL BE STABILIZED PRIOR TO DIRECTING RUNOFF TO THEM.

5. ROADWAYS SHALL BE STABILIZED WITHIN 72 HOURS OF ACHIEVING FINISHED GRADE.

6. CUT AND FILL SLOPES SHALL BE SEEDED/LOAMED WITHIN 72 HOURS OF ACHIEVING FINISHED GRADE.

7. INSPECT AND MAINTAIN ALL EROSION AND SEDIMENTATION CONTROL MEASURES WEEKLY AND AFTER EVERY HALF-INCH OF RAINFALL DURING THE LIFE OF THE PROJECT. REMOVE TRAPPED SEDIMENT FROM COLLECTOR DEVICES AS NEEDED.

8. STABLE IS DEFINED AS:
   - A. BASE COURSE GRAVELS HAVE BEEN INSTALLED IN AREAS TO BE PAVED,
   - B. A MINIMUM OF 85 PERCENT VEGETATED GROWTH HAS BEEN ESTABLISHED,
   - C. A MINIMUM 3-INCHES OF NON-EROSIVE MATERIAL SUCH AS STONE OR RIPRAP HAS BEEN INSTALLED,
   - D. OR EROSION CONTROL BLANKETS HAVE BEEN PROPERLY INSTALLED.

9. ALL AREAS SHALL BE STABILIZED WITHIN 45 DAYS OF INITIAL DISTURBANCE.

10. TEMPORARY AND PERMANENT SEEDING SPECIFICATIONS ARE AS NOTED IN THE "VEGETATION MEASURES" SECTION ON THIS SHEET.

11. STANDARD WINTER NOTES:
   - A. ALL PROPOSED VEGETATED AREAS THAT DO NOT EXHIBIT A MINIMUM 85 PERCENT VEGETATIVE GROWTH BY OCTOBER 15, OR WHICH ARE DISTURBED AFTER OCTOBER 15, SHALL BE STABILIZED BY SEEDING AND INSTALLING EROSION CONTROL BLANKETS ON SLOPES GREATER THAN 3:1, AND SEEDING AND PLACING 3 TO 4 TONS OF MULCH PER ACRE, SECURED WITH ANCHORED NETTING, ELSEWHERE. THE INSTALLATION OF EROSION CONTROL BLANKETS OR MULCH AND NETTING SHALL NOT OCCUR OVER ACCUMULATED SNOW OR ON FROZEN GROUND AND SHALL BE COMPLETED IN ADVANCE OF THAW OR SPRING MELT EVENTS.
   - B. ALL DITCHES OR SWALES WHICH DO NOT EXHIBIT A MINIMUM OF 85 PERCENT VEGETATIVE GROWTH BY OCTOBER 15, OR WHICH ARE DISTURBED AFTER OCTOBER 15, SHALL BE STABILIZED TEMPORARILY WITH STONE OR EROSION CONTROL BLANKETS APPROPRIATE FOR THE DESIGN FLOW CONDITIONS.
   - C. AFTER NOVEMBER 15, INCOMPLETE ROAD OR PARKING SURFACES, WHERE WORK HAS STOPPED FOR THE WINTER SEASON, SHALL BE PROTECTED WITH A MINIMUM OF 3 INCHES OF CRUSHED GRAVEL PER NHDOT ITEM 304.3.

## WINTER CONSTRUCTION NOTES:

1. WINTER EXCAVATION AND EARTHWORK SHALL BE COMPLETED AS SUCH THAT NO MORE THAN 1 ACRE OF THE SITE IS WITHOUT STABILIZATION AT ANY ONE TIME.

2. AN AREA WITHIN 100 FEET OF A PROTECTED NATURAL RESOURCE SHALL BE PROTECTED WITH A DOUBLE ROW OF SEDIMENT BARRIER.

3. TEMPORARY MULCH SHALL BE APPLIED WITHIN 7 DAYS OF SOIL EXPOSURE OR PRIOR TO ANY STORM EVENT, BUT AFTER EVERY WORKDAY IN AREAS WITHIN 100 FEET FROM A PROTECTED NATURAL RESOURCE.

4. AREAS THAT HAVE BEEN BROUGHT TO FINAL GRADE SHALL BE PERMANENTLY MULCHED THE SAME DAY.

5. IN THE EVENT OF A SNOWFALL GREATER THAN 1 INCH (FRESH OR CUMULATIVE), THE SNOW SHALL BE REMOVED FROM THE AREAS DUE TO BE SEEDED AND MULCHED.

6. LOAM SHALL BE FREE OF FROZEN CLUMPS BEFORE IT IS APPLIED.

7. A DITCH THAT WILL BE CONSTRUCTED DURING THE WINTER MUST BE STABILIZED WITH RIPRAP.

8. PERMANENT STABILIZATION CONSISTS OF AT LEAST 85% VEGETATION, PAVEMENT/GRAVEL BASE OR RIPRAP.

9. DO NOT EXPOSE SLOPES OR LEAVE SLOPES EXPOSED OVER THE WINTER OR FOR ANY OTHER EXTENDED TIME OF WORK SUSPENSION UNLESS FULLY PROTECTED WITH MULCH AND EROSION CONTROLS.

10. APPLY STRAW MULCH AT TWICE THE STANDARD RATE (150 LBS. PER 1,000 SF). THE MULCH MUST BE THICK ENOUGH SUCH THAT THE GROUND SURFACE WILL NOT BE VISIBLE AND MUST BE ANCHORED.

11. USE MULCH AND MULCH NETTING OR AN EROSION CONTROL MULCH BLANKET OR MIX FOR ALL SLOPES GREATER THAN 8% OR OTHER AREAS EXPOSED TO DIRECT WIND.

12. INSTALL AN EROSION CONTROL BLANKET IN ALL DRAINAGE WAYS (BOTTOM AND SIDES) WITH A SLOPE GREATER THAN 3%.

13. SEE THE VEGETATION MEASURES FOR MORE INFORMATION ON SEEDING DATES AND TYPES.

## CONSTRUCTION SEQUENCE:

THE FOLLOWING CONSTRUCTION SEQUENCE IS RECOMMENDED (COORDINATE ALL SITE ACTIVITIES AND CONSTRUCTION SEQUENCE WITH THAT OF THE STATION ELECTRICAL EQUIPMENT, OVERHEAD AND UNDERGROUND TRANSMISSION LINES, AND OTHER STATION RELATED CONSTRUCTION):

1. CONTACT THE OWNER, QUALIFIED PROFESSIONAL, AND REGULATORY AGENT AT LEAST FORTY-EIGHT (48) HOURS PRIOR TO COMMENCEMENT OF ANY DEMOLITION, CONSTRUCTION OR REGULATED ACTIVITY ON THIS PROJECT SITE.

2. CLEARING LIMITS SHALL BE PHYSICALLY MARKED IN THE FIELD AND APPROVED BY THE REGULATORY AGENT PRIOR TO THE START OF WORK ON THE SITE. INSTALL PERIMETER EROSION/SEDIMENT CONTROL MEASURES.

3. CONSTRUCT STONE CONSTRUCTION ENTRANCES/EXITS AND INSTALL INLET PROTECTION FOR CATCH BASINS OR INSTALL SILT SACKS ON CATCH BASIN INLETS LOCATED IN OFF-SITE ROADS. INSTALL SILT FENCE AND OTHER EROSION CONTROL DEVICES INDICATED ON THESE PLANS AT PERIMETER OF PROPOSED SITE DISTURBANCE AND INSTALL ALL EROSION/SEDIMENT CONTROL MEASURES AND TREE PROTECTION INDICATED ON THESE PLANS. INSTALL SEDIMENT BASINS AND SEDIMENT TRAPS IF REQUIRED AT LOW AREAS OF SITE OR AS ORDERED BY THE QUALIFIED PROFESSIONAL OR AS SHOWN ON THESE PLANS.

4. CLEAR AND GRUB SITE. STOCKPILE CHIPS. STOCKPILE TOPSOIL. INSTALL EROSION CONTROLS AT STOCKPILES.

5. COMMENCE INSTALLATION OF STORM DRAINAGE SYSTEM.

6. COMMENCE EARTHWORK. CONSTRUCT FILL SLOPE. INSTALL ADDITIONAL EROSION CONTROLS AS WORK PROGRESSES AND CONTINUE STORM DRAINAGE SYSTEM CONSTRUCTION, TOPSOIL AND SEED SLOPES WHICH HAVE ACHIEVED FINAL SITE GRADING.

7. CONSTRUCTION STAKING OF ALL FOUNDATION CORNERS, UTILITIES, ACCESS DRIVES, FENCES AND OTHER SITE APPURTENANCES.

8. ROUGH GRADING AND FILLING OF SUBGRADES AND SLOPES.

9. BEFORE DISPOSING OF SOIL OR RECEIVING BORROW FOR THE SITE, THE CONTRACTOR MUST PROVIDE EVIDENCE THAT EACH SPOIL OR BORROW AREA HAS AN EROSION AND SEDIMENT CONTROL PLAN APPROVED BY THE APPROPRIATE REGULATORY AGENCIES AND WHICH IS BEING IMPLEMENTED AND MAINTAINED. THE CONTRACTOR SHALL ALSO NOTIFY THE APPROPRIATE REGULATORY AGENCIES IN WRITING OF ALL RECEIVING SPOIL AND BORROW AREAS WHEN THEY HAVE BEEN IDENTIFIED.

10. CONTINUE INSTALLATION OF STORM DRAINAGE AS SUBGRADE ELEVATIONS ARE ACHIEVED.

11. CONSTRUCT PAD SUBGRADE PREPARATION AND BEGIN FOUNDATION CONSTRUCTION.

12. THROUGHOUT CONSTRUCTION SEQUENCE, REMOVE SEDIMENT FROM BEHIND SILT FENCES, STRAW BALES AND OTHER EROSION CONTROL DEVICES, AND FROM SEDIMENT TRAPS AS REQUIRED. REMOVAL SHALL BE ON A PERIODIC BASIS (EVERY SIGNIFICANT RAINFALL OF 0.50 INCH OR GREATER). INSPECTION OF EROSION/SEDIMENT CONTROL MEASURES SHALL BE ON A WEEKLY BASIS AND AFTER EACH RAINFALL OF 0.50 INCHES OR GREATER. SEDIMENT COLLECTED SHALL BE DEPOSITED AND SPREAD EVENLY UPLAND ON SLOPES DURING CONSTRUCTION.

13. COMPLETE GRADING TO SUBGRADES AND COMPLETE CONSTRUCTION OF FOUNDATIONS.

14. CONSTRUCT CURBS, PAVEMENT STRUCTURE AND SIDEWALKS

15. CONDUCT FINE GRADING.

16. PAVING OF ACCESS ROAD

17. CONSTRUCT OFF-SITE ROADWAY IMPROVEMENTS, AS NECESSARY.

18. INSTALL YARD SURFACE STONE. FINAL FINE GRADING OF SLOPE AND NON-PAVED AREAS.

19. PLACE 4" TOPSOIL ON SLOPES AFTER FINAL GRADING IS COMPLETED. FERTILIZE, SEED, AND MULCH.

20. LANDSCAPE INTERIOR NON-PAVED AREAS, NON-GRAVELED AREAS, AND PERIMETER AREAS.

21. INSTALL ON-SITE SIGNAGE AND PAVEMENT MARKINGS

22. CLEAN STORM DRAINAGE PIPE STRUCTURES, DETENTION SYSTEMS AND WATER QUALITY DEVICES OF DEBRIS AND SEDIMENT.

23. UPON DIRECTION OF THE OWNER, QUALIFIED PROFESSIONAL, AND REGULATORY AGENT, EROSION AND SEDIMENT CONTROL MEASURES SHALL BE REMOVED FOLLOWING STABILIZATION OF THE SITE.

### ROUGH GRADING OPERATIONS

1. DURING THE REMOVAL AND/OR PLACEMENT OF EARTH AS INDICATED ON THE GRADING PLAN, TOPSOIL SHALL BE STRIPPED AND APPROPRIATELY STOCKPILED FOR REUSE.

2. ALL STOCKPILED TOPSOIL SHALL BE SEEDED, APPLY MULCH OR STRAW, AND ENCLOSED BY A SILTATION FENCE.

### FILLING OPERATIONS

1. PRIOR TO FILLING, ALL SEDIMENTATION AND EROSION CONTROL DEVICES SHALL BE PROPERLY IMPLEMENTED, MAINTAINED AND FULLY INSTALLED, AS DIRECTED BY THE QUALIFIED PROFESSIONAL AND AS SHOWN ON THIS PLAN.

### PLACEMENT OF DRAINAGE STRUCTURES, UTILITIES, AND FOUNDATION CONSTRUCTION OPERATIONS

1. SILT FENCES SHALL BE INSTALLED AT THE DOWNHILL SIDES OF EXCAVATIONS, MUD PUMP DISCHARGES, AND UTILITY TRENCH MATERIAL STOCKPILES. STRAW BALES MAY BE USED IF SHOWN ON THE EROSION CONTROL PLANS OR IF DIRECTED BY THE QUALIFIED PROFESSIONAL.

### FINAL GRADING AND PAVING OPERATIONS

1. ALL INLET AND OUTLET PROTECTION SHALL BE PLACED AND MAINTAINED AS SHOWN ON EROSION CONTROL PLANS AND DETAILS, AND AS DESCRIBED IN SPECIFICATIONS AND AS DESCRIBED HEREIN.

2. NO CUT OR FILL SLOPES SHALL EXCEED 2:1 EXCEPT WHERE STABILIZED BY ROCK FACED EMBANKMENTS OR EROSION CONTROL BLANKETS, JUTE MESH AND VEGETATION. ALL SLOPES SHALL BE SEEDED, AND ANY ROAD OR DRIVEWAY SHOULDER AND BANKS SHALL BE STABILIZED IMMEDIATELY UPON COMPLETION OF FINAL GRADING UNTIL TURF IS ESTABLISHED.

3. PAVEMENT SUB-BASE AND BASE COURSES SHALL BE INSTALLED OVER AREAS TO BE PAVED AS SOON AS FINAL SUB-GRADES ARE ESTABLISHED AND UNDERGROUND UTILITIES AND STORM DRAINAGE SYSTEMS HAVE BEEN INSTALLED.

4. AFTER CONSTRUCTION OF PAVEMENT, TOPSOIL, FINAL SEED, MULCH AND LANDSCAPING, REMOVE ALL TEMPORARY EROSION CONTROL DEVICES ONLY AFTER ALL AREAS HAVE BEEN PAVED AND/OR GRASS HAS BEEN WELL ESTABLISHED AND THE SITE HAS BEEN INSPECTED AND APPROVED BY THE OWNER AND THE APPLICABLE REGULATORY AGENCIES.

5. AN AREA SHALL BE CONSIDERED TO HAVE ACHIEVED FINAL STABILIZATION WHEN IT HAS A MINIMUM OF 85% UNIFORM PERENNIAL VEGETATIVE COVER OR OTHER PERMANENT NON-VEGETATIVE COVER WITH A DENSITY SUFFICIENT TO RESIST ACCELERATED SURFACE EROSION AND SUBSURFACE CHARACTERISTICS SUFFICIENT TO RESIST SLIDING OR OTHER MOVEMENTS.

6. MAINTAIN ALL PERMANENT AND TEMPORARY SEDIMENT CONTROL DEVICES IN EFFECTIVE CONDITION THROUGHOUT THE CONSTRUCTION PERIOD. UPON COMPLETION OF WORK SWEEP PARKING LOT AND REMOVE ALL TEMPORARY SEDIMENT CONTROLS WHEN AUTHORIZED BY LOCAL GOVERNING AUTHORITY. FILE NOT (NOTICE OF TERMINATION) WITH GOVERNING AUTHORITY RESPONSIBLE FOR REGULATING STORM WATER DISCHARGES FROM CONSTRUCTION ACTIVITIES PER NPDES.

STATE OF NEW HAMPSHIRE
BRIAN S. SAKIDOVITCH
No. 14328
LICENSED
PROFESSIONAL ENGINEER

This document has been digitally sealed.
Oct 5 2015

**FOR PERMITTING PURPOSES ONLY**
**NOT FOR CONSTRUCTION**

| NO. | REVISION | DATE | DRWN | CHKD | APPRV |
|---|---|---|---|---|---|
| 1 | ISSUED FOR PERMITTING | 10/1/15 | JJS | RLR | BSS |

THE NORTHERN PASS

Transmission Business

TRANSITION STATION #6
EROSION AND SEDIMENTATION CONTROL NOTES

DATE: 10/1/2015
SCALE: NTS

DES: JJS CHK: RLR
DRW: JJS APR: BSS
TOWN: BRIDGEWATER, NH
TRANSMISSION LINE:
MILE NO:
SHEET 10 OF 20
NPTT910-C500

REVISION: XXX

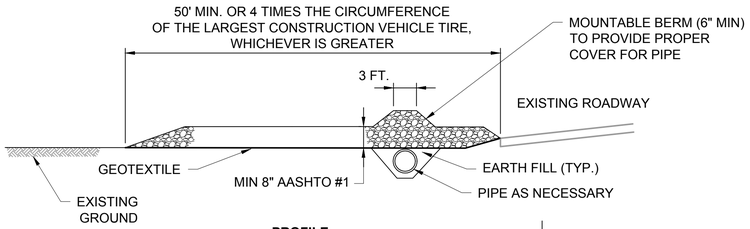


**PROFILE**

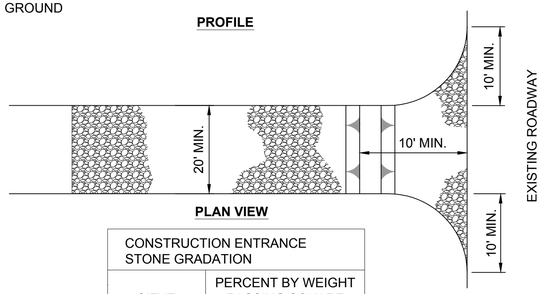


**PLAN VIEW**

| CONSTRUCTION ENTRANCE STONE GRADATION | |
|---|---|
| SIEVE | PERCENT BY WEIGHT PASSING SQUARE MESH SIEVE |
| 2-1/2 INCH | 100 |
| 2 INCH | 90-100 |
| 1-1/2 INCH | 35-70 |
| 1 INCH | 0-15 |
| 1/2 INCH | 0-5 |

**NOTES:**

1. FILTER CLOTH - WILL BE PLACED OVER THE ENTIRE AREA PRIOR TO PLACING OF STONE SURFACE.
2. WATER - ALL SURFACE WATER FLOWING OR DIVERTED TOWARD CONSTRUCTION ENTRANCES SHALL BE PIPED ACROSS THE ENTRANCE. IF PIPING IS IMPRACTICAL, A MOUNTABLE BERM WITH 5:1 SLOPES WILL BE PERMITTED.
3. MAINTENANCE - THE ENTRANCE SHALL BE MAINTAINED IN A CONDITION WHICH WILL PREVENT TRACKING OR FLOWING OF SEDIMENT ONTO PUBLIC RIGHTS-OF-WAY. THIS MAY REQUIRE PERIODIC TOP DRESSING WITH ADDITIONAL STONE AS CONDITIONS DEMAND AND REPAIR AND/OR CLEANOUT OF ANY MEASURES USED TO TRAP SEDIMENT. ALL SEDIMENT SPILLED, DROPPED, WASHED OR TRACKED ONTO PUBLIC RIGHTS-OF-WAY MUST BE REMOVED IMMEDIATELY.
4. WASHING - WHEELS SHALL BE CLEANED TO REMOVE SEDIMENT PRIOR TO ENTRANCE ONTO PUBLIC RIGHTS-OF-WAY. WHEN WASHING IS REQUIRED, IT SHALL BE DONE ON AN AREA STABILIZED WITH STONE AND WHICH DRAINS INTO AN APPROVED SEDIMENT TRAPPING DEVICE.
5. PERIODIC INSPECTION AND NEEDED MAINTENANCE SHALL BE PROVIDED AFTER EACH RAIN STORM EVENT.

**STABILIZED CONSTRUCTION ENTRANCE** — 1 / C102
NOT TO SCALE

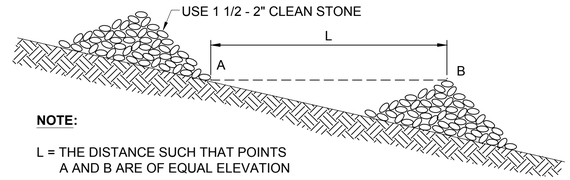


**NOTE:**

L = THE DISTANCE SUCH THAT POINTS A AND B ARE OF EQUAL ELEVATION

**SIDE VIEW**

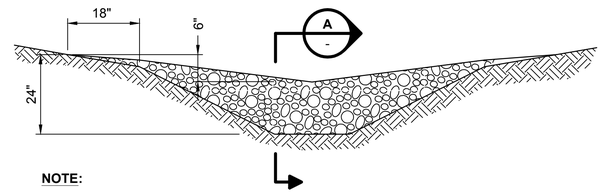


**NOTE:**

KEY STONE INTO CHANNEL BANKS AND EXTEND IT BEYOND THE ABUTMENTS A MINIMUM OF 18" TO PREVENT FLOW AROUND THE DAM.

**VIEW LOOKING UPSTREAM**

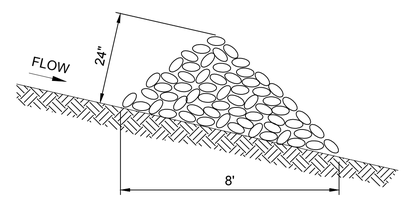


**SECTION A**

**STONE CHECK DAM** — 2 / C102
NOT TO SCALE

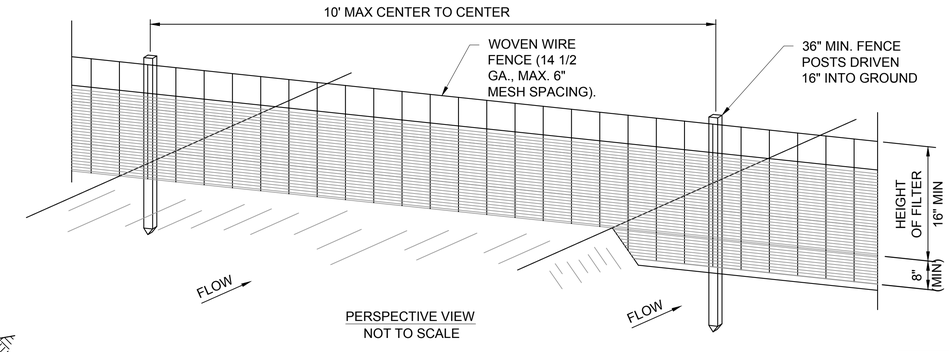


PERSPECTIVE VIEW
NOT TO SCALE

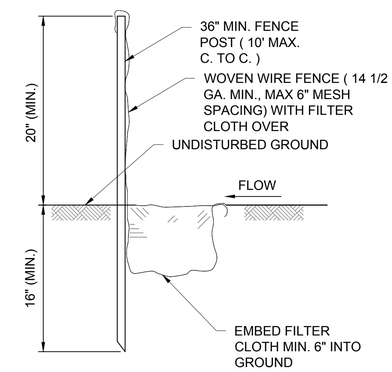


NOTES:

1. WOVEN WIRE FENCE TO BE FASTENED SECURELY TO FENCE POSTS WITH WIRE TIES OR STAPLES.
2. FILTER CLOTH TO BE FASTENED SECURELY TO WOVEN WIRE FENCE WITH TIES SPACED EVERY 24" AT TOP AND MID SECTION
3. WHEN TWO SECTIONS OF FILTER CLOTH ADJOIN EACH OTHER THEY SHALL BE OVER- LAPPED BY SIX INCHES AND FOLDED.
4. MAINTENANCE SHALL BE PERFORMED AS NEEDED AND MATERIAL REMOVED WHEN "BULGES" DEVELOP IN THE SILT FENCE.

| | |
|---|---|
| POSTS: | STEEL EITHER "T" OR "U" TYPE OR 2" HARDWOOD. |
| FENCE: | WOVEN WIRE 14 1/2 GA. 6" MAX. MESH OPENING. |
| FILTER CLOTH: | FILTER X, MIRAFI 100X, STABILINKA T140N OR APPROVED EQUAL. |
| PREFABRICATED UNIT: | GEOFAB, ENVIROFENCE, OR APPROVED EQUAL. |

**SILT FENCE** — 3 / C102
NOT TO SCALE

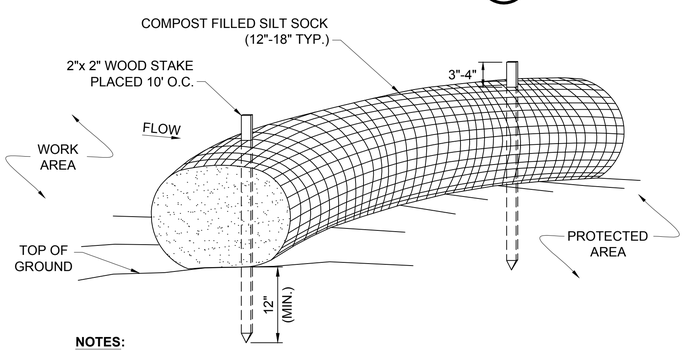


**NOTES:**

1. SILT SOCK SHALL BE FILTREXX™ SILTSOXX™ OR APPROVED EQUIVALENT.
2. SEE SPECIFICATIONS FOR SOCK SIZE AND COMPOST FILL REQUIREMENTS.
3. SILT SOCK SHALL BE INSPECTED PERIODICALLY AND AFTER ALL STORM EVENTS, AND REPAIR OR REPLACEMENT SHALL BE PERFORMED AS NEEDED.
4. COMPOST MATERIAL SHALL BE DISPERSED ON SITE, AS DETERMINED BY THE QUALIFIED PROFESSIONAL.

**SILT SOCK** — 4 / C102
NOT TO SCALE

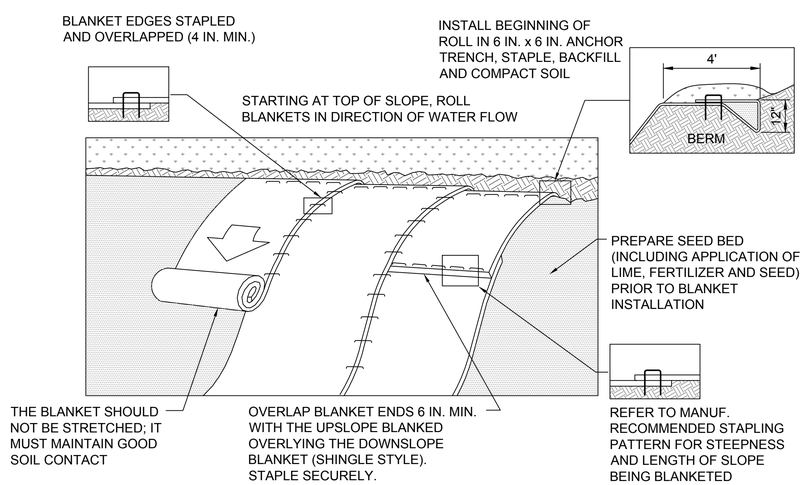


**NOTES:**

1. SEED AND SOIL AMENDMENTS SHALL BE APPLIED ACCORDING TO THE RATES IN THE PLAN DRAWINGS PRIOR TO INSTALLING THE BLANKET.
2. PROVIDE ANCHOR TRENCH AT TOE OF SLOPE IN SIMILAR FASHION AS AT TOP OF SLOPE.
3. SLOPE SURFACE SHALL BE FREE OF ROCKS, CLODS, STICKS, AND GRASS.
4. BLANKET SHALL HAVE GOOD CONTINUOUS CONTACT WITH UNDERLYING SOIL THROUGHOUT ENTIRE LENGTH. LAY BLANKET LOOSELY AND STAKE OR STAPLE TO MAINTAIN DIRECT CONTACT WITH SOIL. DO NOT STRETCH BLANKET.
5. THE BLANKET SHALL BE STAPLED IN ACCORDANCE WITH THE MANUFACTURER'S RECOMMENDATIONS.
6. BLANKETED AREAS SHALL BE INSPECTED WEEKLY AND AFTER EACH RUNOFF EVENT UNTIL PERENNIAL VEGETATION IS ESTABLISHED TO A MINIMUM UNIFORM 70% COVERAGE THROUGHOUT THE BLANKETED AREA. DAMAGED OR DISPLACED BLANKETS SHALL BE RESTORED OR REPLACED WITHIN 4 CALENDAR DAYS.

**EROSION CONTROL BLANKET** — 5 / C102
NOT TO SCALE

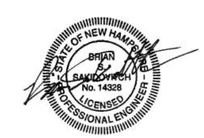


This document has been digitally sealed.
Oct 5 2015

**FOR PERMITTING PURPOSES ONLY**
**NOT FOR CONSTRUCTION**

| NO. | REVISION | DATE | DRWN | CHKD | APPRV. |
|---|---|---|---|---|---|
| 1 | ISSUED FOR PERMITTING | 10/1/15 | JJS | RLR | BSS |

THE NORTHERN PASS
Transmission Business

TRANSITION STATION #6
EROSION AND SEDIMENTATION CONTROL DETAILS

DATE: 10/1/2015
SCALE: NTS

DES: JJS | CHK: RLR
DRW: JJS | APR: BSS
TOWN: BRIDGEWATER, NH
TRANSMISSION LINE:
MILE NO:
SHEET 11 OF 20
NPTT911-C501
REVISION: XXX

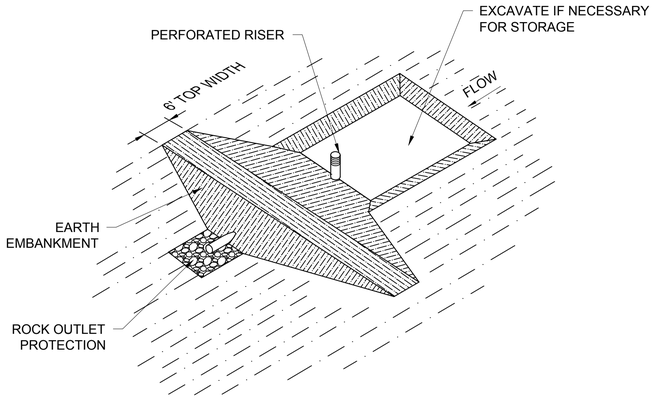


**ISOMETRIC VIEW**

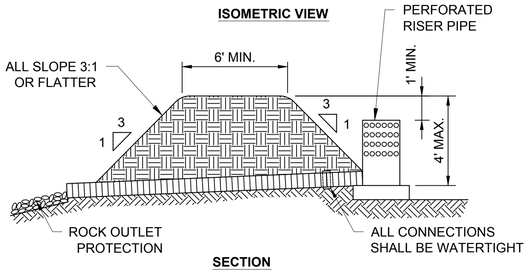


**SECTION**

**PIPE OUTLET SEDIMENT TRAP** (1 / C502)
NOT TO SCALE

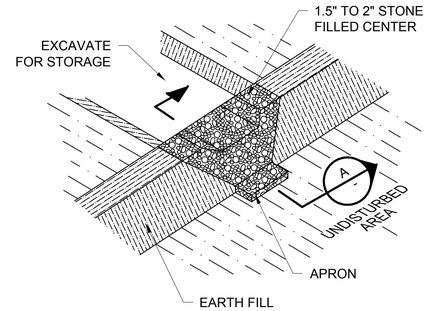


**ISOMETRIC VIEW**

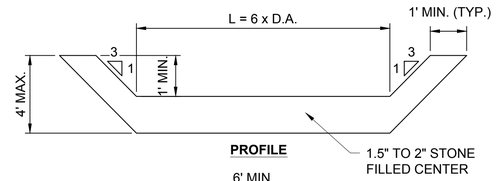


**PROFILE**

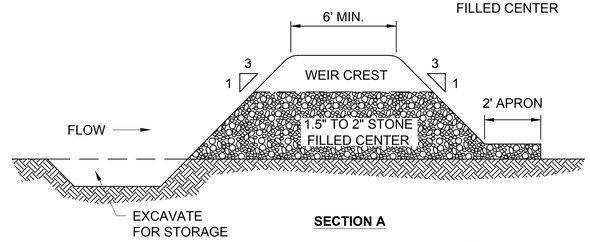


**SECTION A**

**STONE OUTLET SEDIMENT TRAP** (2 / C502)
NOT TO SCALE

**NOTES:**

1. REQUIRED FOR DISTURBED AREAS GREATER THAN 5 ACRES WITHIN A DRAINAGE AREA LESS THAN 100 ACRES.
2. SEDIMENT BASIN WILL BE REMOVED WITHIN 3 YEARS.

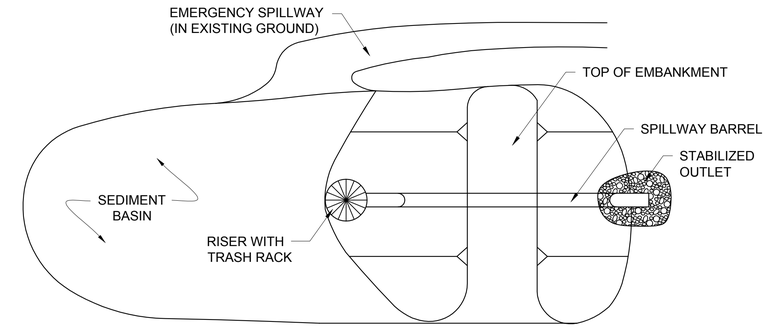


**PLAN**

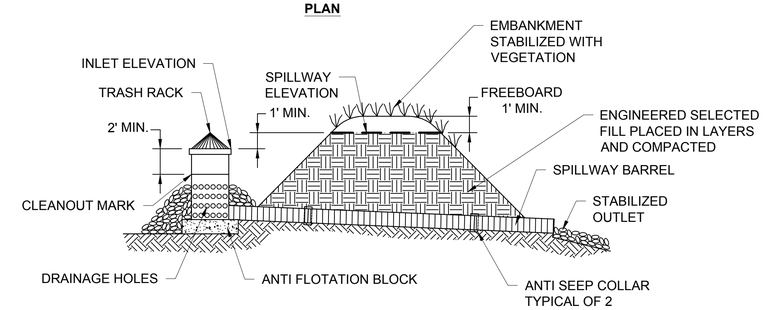


**SECTION**

**TYPICAL SEDIMENT BASIN** (3 / C502)
NOT TO SCALE

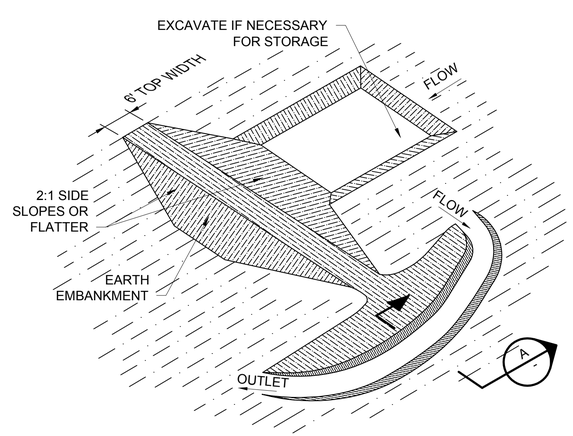


**ISOMETRIC VIEW**

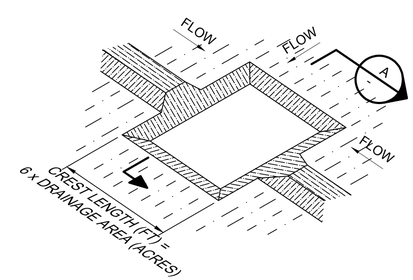


**ISOMETRIC VIEW**

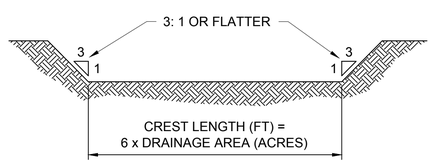


**SECTION A**

**EMBANKMENT**

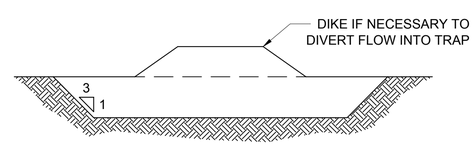


**SECTION A**

**EXCAVATED**

**EARTH OUTLET SEDIMENT TRAP** (4 / C502)
NOT TO SCALE


This document has been digitally sealed.
Oct 5 2015

**FOR PERMITTING PURPOSES ONLY**
**NOT FOR CONSTRUCTION**

| NO. | REVISION | DATE | DRWN | CHKD | APPRV. |
|---|---|---|---|---|---|
| 1 | ISSUED FOR PERMITTING | 10/1/15 | JJS | RLR | BSS |

THE NORTHERN PASS
Transmission Business

TRANSITION STATION #6
EROSION AND SEDIMENTATION CONTROL DETAILS

DATE: 10/1/2015
SCALE: N/TS

DES: JJS | CHK: RLR
DRW: JJS | APR: BSS
TOWN: BRIDGEWATER, NH
TRANSMISSION LINE:
MILE NO:
SHEET 12 OF 20
NPTT912-C502
REVISION: XXX

Z:\CLIENTS\TND\NUSC\58466_NPT\DESIGN\SUBSTATION\900-TRANSITION_STATION-6\CADD\NPTT912-C502.DWG 10/5/2015 8:38 AM BSAKIDOVITCH

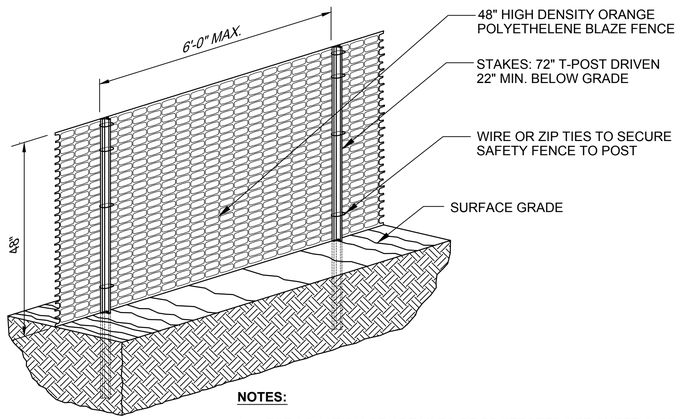


**NOTES:**

1. FOR LOCATION OF AREAS TO BE PROTECTED SEE SHEET C102.
2. SAFETY FENCE SHALL BE FASTENED SECURELY TO THE T-POSTS.
3. THE FENCING MUST REMAIN IN PLACE DURING ALL PHASES OF CONSTRUCTION AND UNTIL ALL DISTURBED AREAS HAVE BEEN STABILIZED.

**CONSTRUCTION FENCE** — 1 / C102
NOT TO SCALE

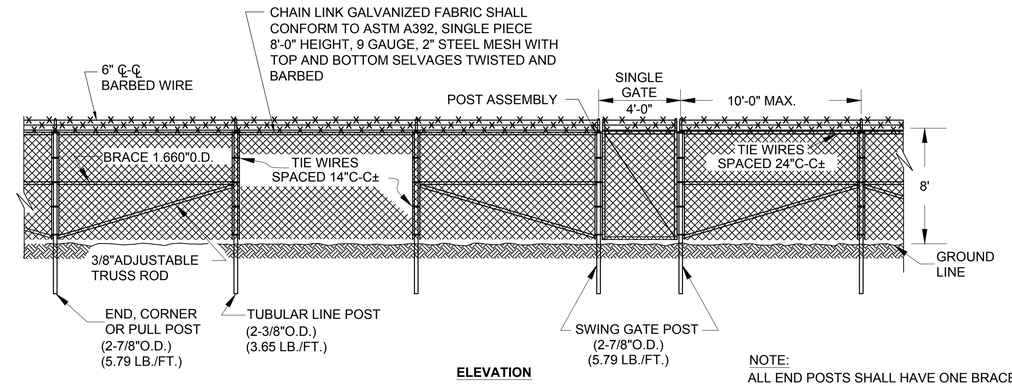


**ELEVATION**

NOTE:
ALL END POSTS SHALL HAVE ONE BRACE
ALL CORNER AND INTERMEDIATE BRACE OR PULL POSTS SHALL HAVE TWO BRACES, WITH A MAXIMUM SPACING OF BETWEEN POST ASSEMBLIES OF 500 FEET.

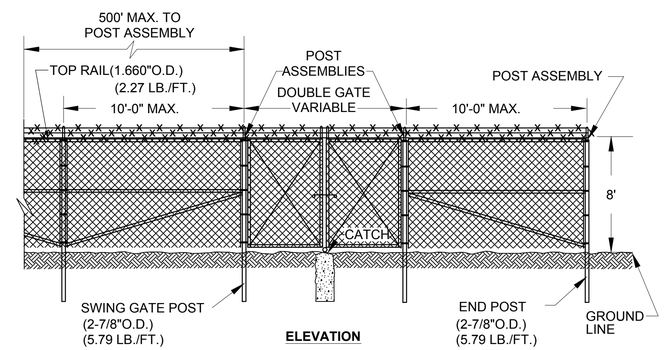


**ELEVATION**

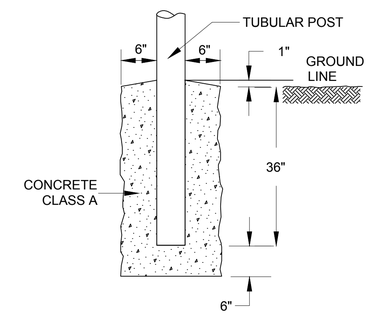


**FOOTING DETAIL**

**SECURITY FENCE** — 2 / C100
NOT TO SCALE

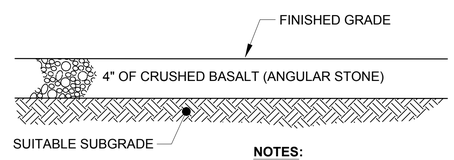


| SUBSTATION AND ACCESS ROAD SURFACE STONE GRADATION | |
|---|---|
| SIEVE | PERCENT BY WEIGHT PASSING SQUARE MESH SIEVE |
| 1-1/2 INCH | 100 |
| 1 INCH | 93-100 |
| 1/2 INCH | 27-58 |
| 1/4 INCH | 0-8 |

**NOTES:**

1. REMOVE ALL LOAM, CLAY, MUCK, STUMPS, AND OTHER IMPROPER ROAD FOUNDATION MATERIAL WITHIN 2' OF SUBGRADE. REPLACE WITH COMPACTED GRANULAR FILL MATERIAL ACCEPTABLE TO APPROVING AGENCY. COMPACTION TO BE AT LEAST 95% OF STANDARD PROCTOR.
2. SUBSTATION SURFACE STONE SHALL EXTEND 5-FT OUTSIDE THE SUBSTATION PERIMETER FENCE.
3. GRAVEL ACCESS ROADS SHALL HAVE AT LEAST 8-INCHES OF PROCESSED AGGREGATE BASE.

**SUBSTATION GRAVEL SURFACE SECTION** — 3 / C100
NOT TO SCALE


This document has been digitally sealed.
Oct 5 2015

**FOR PERMITTING PURPOSES ONLY**
**NOT FOR CONSTRUCTION**

| NO. | REVISION | DATE | DRWN | CHKD | APPRV. |
|---|---|---|---|---|---|
| 1 | ISSUED FOR PERMITTING | 10/1/15 | JJS | RLR | BSS |

THE NORTHERN PASS
Transmission Business

TRANSITION STATION #6 CONSTRUCTION DETAILS

DATE: 10/1/2015
SCALE: NTS

DES: JJS | CHK: RLR
DRW: JJS | APR: BSS
TOWN: BRIDGEWATER, NH
TRANSMISSION LINE:
MILE NO:
SHEET 13 OF 20
NPTT913-C503
REVISION: XXX

Z:\CLIENTS\TND\NUSC\58466_NPT\DESIGN\SUBSTATION\900-TRANSITION_STATION-6\CADD\NPTT913-C503.DWG 10/5/2015 8:37 AM BSAKIDOVITCH

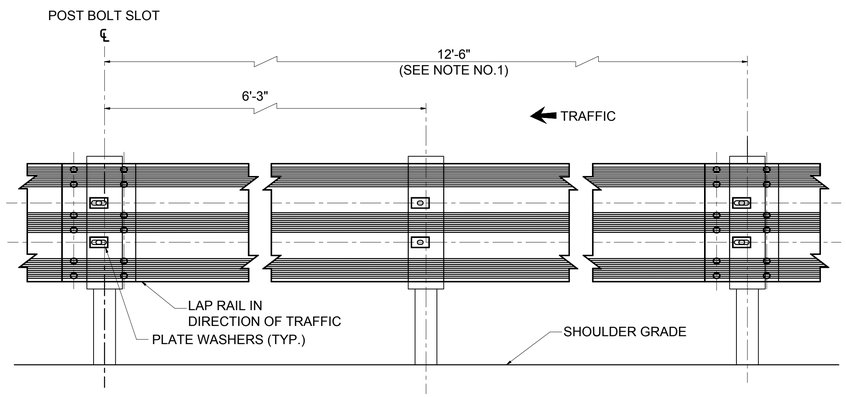


**ELEVATION VIEW**

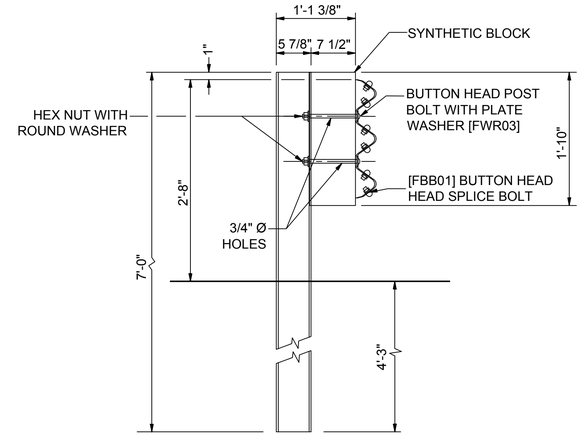


**SIDE VIEW AT SPLICE POST**

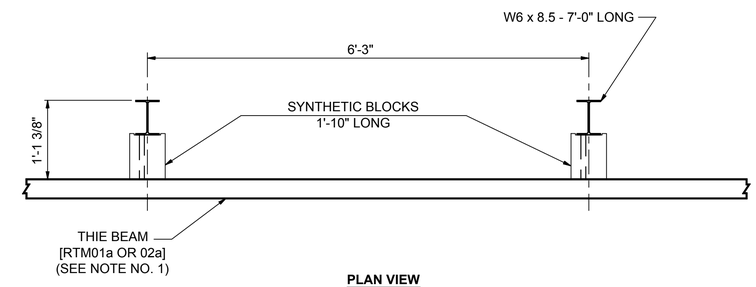


**PLAN VIEW**

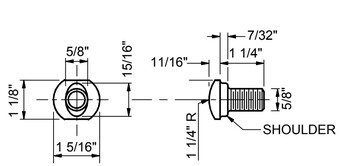


**SPLICE POST**
**[FBB01]**
**(12 REQ'D PER SPLICE)**

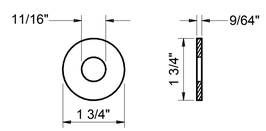


**ROUND WASHER**
**[FWC16a]**

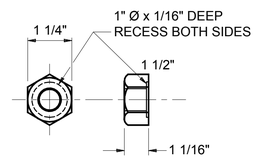


**NUT FOR SPLICE & POST BOLTS**
**[FBB01]**

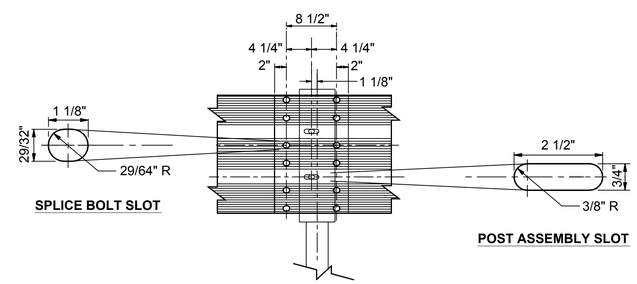


**SPLICE BOLT SLOT**

**POST ASSEMBLY SLOT**

**BEAM SPLICE**

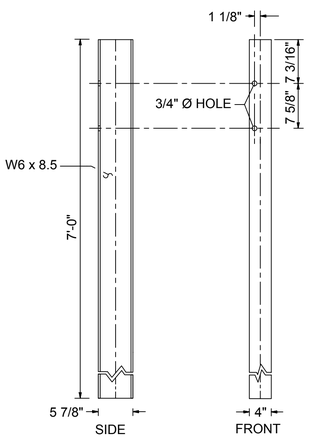


**SYNTHETIC OFFSET BLOCK**

**STEEL POST**

**STRUCTURAL SHAPE STEEL POST & BLOCK**

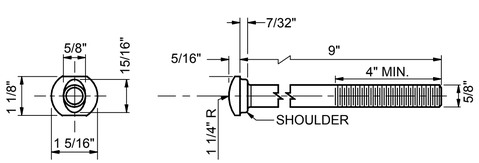


**POST BOLT**

**NOTE :**
LONGER ERECTION BOLTS MAY BE REQUIRED.

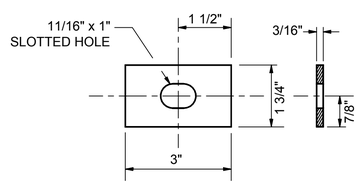


**PLATE WASHER**
**[FWC03]**

**THRIE BEAM RAIL**

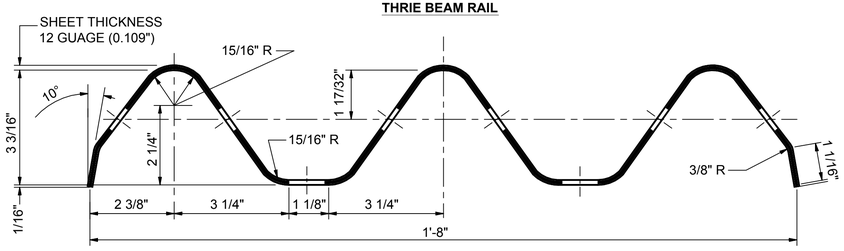


**THRIE BEAM RAIL SECTION**
**[RTM01a & RTM02a]**

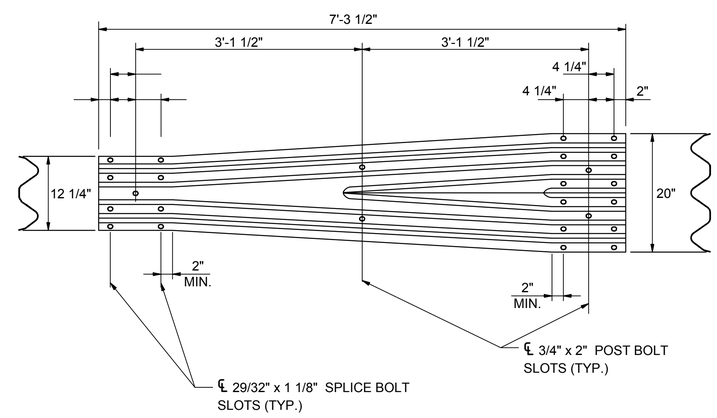


**W-THRIE BEAM TRANSITION SECTION**
**[RTM01a]**

**NOTES:**

1. 25'-0" RAIL PANELS MAY BE USED IN PLACE OF 12'-6" PANELS, EXCEPT ON CURVES WITH A RAIL RADIUS OF LESS THAN 300 FT.
2. GUIDERAIL HEIGHT SHALL BE SET FROM THE GRADE AT THE FACE OF RAIL.
3. DESIGNATIONS PROVIDED IN BRACKETS [ ] REFERENCE STANDARD ELEMENTS DETAILED IN "A GUIDE TO STANDARDIZED HIGHWAY BARRIER HARDWARE", LATEST ADOPTED VERSION, AASHTO-AGC-ARTBA JOINT COOPERATIVE COMMITTEE.
4. SEE STD. NO. DL-1 FOR BEAM GUIDERAIL DELINEATORS.
5. PAID FOR UNDER APPROPRIATE 606 ITEMS, OR AS SHOWN ON PLANS.
6. DIMENSIONS OF PLASTIC AND SYNTHETIC BLOCKOUTS ARE AS SHOWN ON MANUFACTURER'S DRAWINGS.
7. POSTS SHORTER THAN THE 7'-0" INDICATED ON THE DETAIL, BUT NOT LESS THAN 6'-6", MAY ONLY BE USED WHEN
   A) THE SLOPE BEHIND THE GUIDEDRAIL IS NO STEEPER THAN 4:1
   B) WHERE THE DISTANCE FROM THE BACK OF THE POST TO THE BREAK OF THE SLOPE IS A MINIMUM OF 2'-0"
   C) AND THEN ONLY AS APPROVED OR SPECIFICALLY SHOWN ON THE PLANS.

**SOURCE:** NEW HAMPSHIRE DEPARTMENT OF TRANSPORTATION.
**NOTE :** NHDOT GUIDERAIL DETAILS SHOWN FOR REFERENCE ONLY.

**NHDOT GUIDERAIL (GR-14)** — 1 / C100
NOT TO SCALE


This document has been digitally sealed.
Oct 5 2015

**FOR PERMITTING PURPOSES ONLY**
**NOT FOR CONSTRUCTION**

| NO. | ISSUED FOR PERMITTING REVISION | DATE | DRWN | CHKD | APPRV. |
|---|---|---|---|---|---|
| 1 | | 10/1/15 | JJS | RLR | BSS |

THE NORTHERN PASS
Transmission Business

TRANSITION STATION #6
CONSTRUCTION DETAILS

DATE: 10/1/2015
SCALE: NTS

DES: JJS | CHK: RLR
DRW: JJS | APR: BSS
TOWN: BRIDGEWATER, NH
TRANSMISSION LINE:
MILE NO:
SHEET 14 OF 20
NPTT914-C504
REVISION: XXX

Z:\CLIENTS\TND\NUSC\58466_NPT\DESIGN\SUBSTATION\900-TRANSITION_STATION-6\CADD\NPTT914-C504.DWG 10/5/2015 8:53 AM BSAKIDOVITCH

| DIAMETER | WALL THICKNESS (MIN.) | FLOOR THICKNESS (MIN.) |
|---|---|---|
| 4' | 5" | 6" |
| 5' | 6" | 8" |
| 6' | 7" | 8" |
| 8' | 9" | 10" |

| CORE HOLE SIZE | | | | |
|---|---|---|---|---|
| PIPE SIZE | RCP CORE HOLE DIA. | | PLASTIC CORE HOLE DIA. | |
| INCHES | INCHES | FEET | INCHES | FEET |
| 6 | | | 7 | 0.6 |
| 12 | 18 | 1.5 | 18 | 1.5 |
| 15 | 22 | 1.8 | 20 | 1.7 |
| 18 | 26 | 2.2 | 24 | 2.0 |
| 24 | 34 | 2.8 | 32 | 2.7 |
| 30 | 42 | 3.5 | 42 | 3.5 |
| 36 | 48 | 4.0 | 48 | 4.0 |
| 42 | 54 | 4.5 | 54 | 4.5 |
| 48 | 64 | 5.3 | 64 | 5.3 |
| 54 | 72 | 6.0 | | |
| 60 | 78 | 6.5 | | |

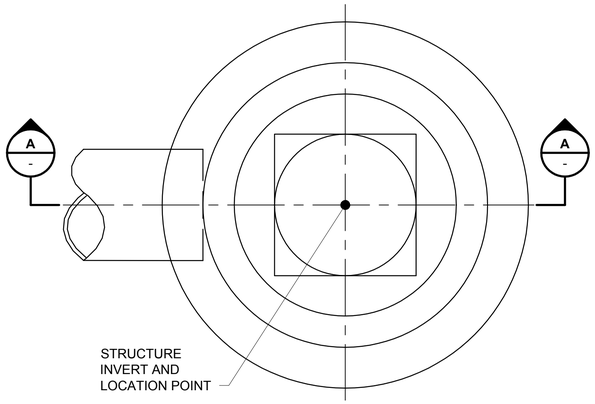


PLAN

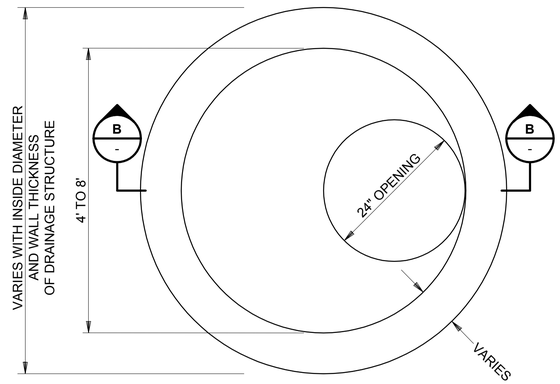


PLAN


* FOR 6' Ø STRUCTURES
USE 16" & 12" DIMENSIONS

SECTION B-B

FLAT SLAB TOP

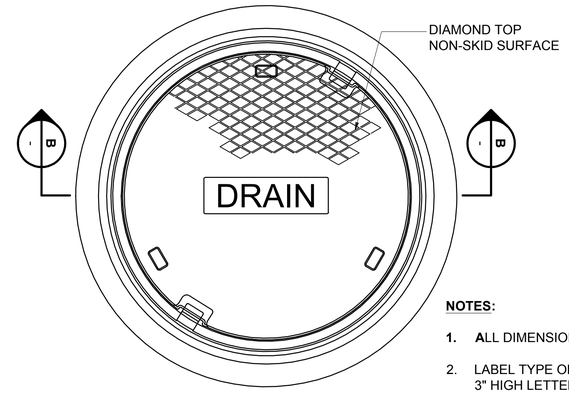


PLAN

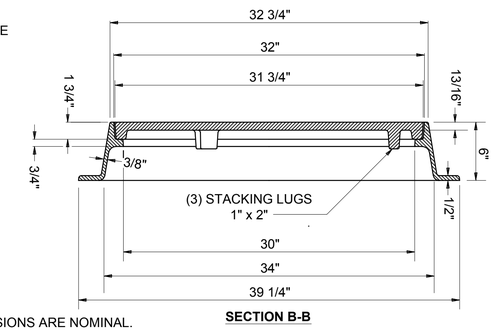


SECTION B-B

**NOTES:**

1. ALL DIMENSIONS ARE NOMINAL.
2. LABEL TYPE OF MANHOLE WITH 3" HIGH LETTERS IN THE CENTER OF THE COVER.

**SOURCE: NEW HAMPSHIRE DEPARTMENT OF TRANSPORTATION STANDARD PLANS FOR ROAD CONSTRUCTION 2010.**

**MANHOLE FRAME AND COVER** (2 / -)
NOT TO SCALE

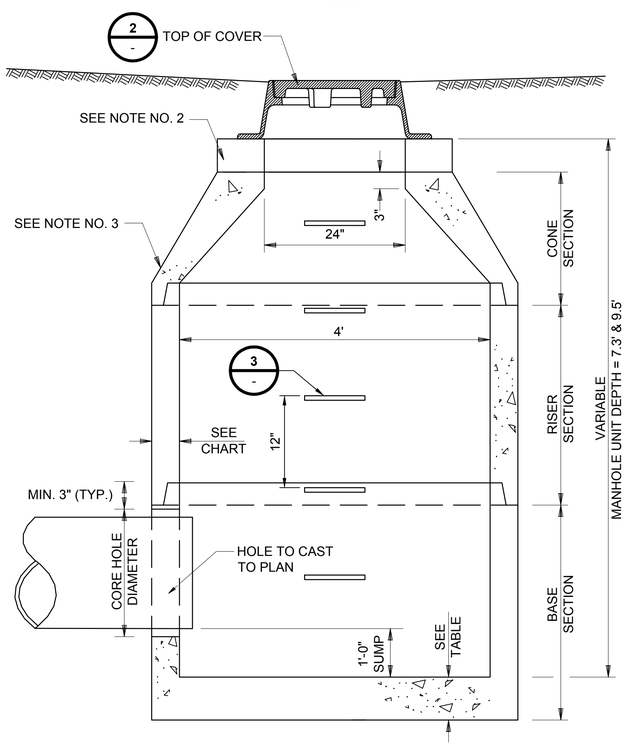


SECTION A-A

**SOURCE: NEW HAMPSHIRE DEPARTMENT OF TRANSPORTATION STANDARD PLANS FOR ROAD CONSTRUCTION 2010.**

**PRECAST CONCRETE MANHOLE** (1 / C104)
NOT TO SCALE

**GENERAL NOTES:**

1. MANHOLES TO CONFORM TO NH DOT SECTION 604.1 REQUIREMENTS.
2. FITTING FRAME TO GRADE MAY BE DONE WITH PREFABRICATED ADJUSTMENT RINGS OR CLAY BRICKS (2 COURSES MAX.).
3. CONE SECTIONS MAY BE EITHER CONCENTRIC OR ECCENTRIC, OR FLAT SLAB TOPS MAY BE USED WHERE PIPE WOULD OTHERWISE ENTER INTO THE CONE SECTION OF THE STRUCTURE AND WHERE PERMITTED.
4. PIPE ELEVATIONS SHOWN ON PLANS SHALL BE FIELD VERIFIED PRIOR TO PRECASTING.
5. OUTSIDE EDGES OF PIPES SHALL PROJECT NO MORE THAN 3" BEYOND INSIDE WALL OF STRUCTURE.
6. PRECAST SECTIONS SHALL HAVE A TONGUE AND GROOVE JOINT 4" HIGH AT AN 11° ANGLE CENTERED IN THE WIDTH OF THE WALL AND SHALL BE ASSEMBLED USING AN APPROVED FLEXIBLE SEALANT IN JOINTS.
7. ALL STRUCTURES WITH MULTIPLE PIPES SHALL HAVE A MINIMUM OF 12" OF INSIDE SURFACE BETWEEN HOLES, NO MORE THAN 75% OF A HORIZONTAL CROSS-SECTION SHALL BE HOLES, AND THERE SHALL BE NO HOLES CLOSER THAN 3" TO JOINTS.

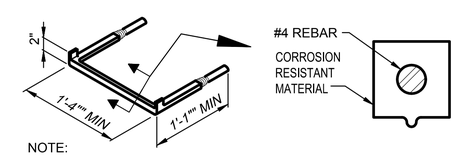


NOTE:
No. 4 REBAR ENCASED IN CORROSION RESISTANT RUBBER OR OTHER MATERIAL APPROVED BY THE OWNER'S REPRESENTATIVE.

**MANHOLE STEP** (3 / -)
NOT TO SCALE

STATE OF NEW HAMPSHIRE — BRIAN S. SAKIDOVITCH — No. 14328 — LICENSED PROFESSIONAL ENGINEER

This document has been digitally sealed.
Oct 5 2015

**FOR PERMITTING PURPOSES ONLY**
**NOT FOR CONSTRUCTION**

| NO. | REVISION | DATE | DRWN | CHKD | APPRV. |
|---|---|---|---|---|---|
| 1 | ISSUED FOR PERMITTING | 10/1/15 | JJS | RLR | BSS |

THE NORTHERN PASS
Transmission Business

TRANSITION STATION #6
CONSTRUCTION DETAILS

DATE: 10/1/2015
SCALE: NTS

DES: JJS | CHK: RLR
DRW: JJS | APR: BSS
TOWN: BRIDGEWATER, NH
TRANSMISSION LINE:
MILE NO:
SHEET 15 OF 20
NPTT915-C505
REVISION: XXX

Z:\CLIENTS\TND\NUSC\58466_NPT\DESIGN\SUBSTATION\900-TRANSITION_STATION-6\CADD\NPTT915-C505.DWG 10/5/2015 8:53 AM BSAKIDOVITCH

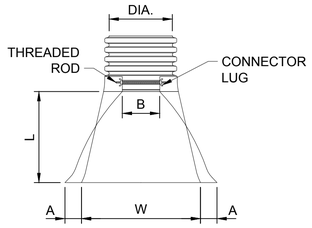


PLAN

| PIPE DIA. | A | B | H | L | W |
|---|---|---|---|---|---|
| 12" | 6.5" | 10.0" | 6.5" | 25' | 29" |
| 15" | 6.5" | 10.0"' | 6.5" | 25" | 29" |
| 18" | 7.5" | 15.0" | 6.5" | 32" | 35" |
| 24" | 7.5" | 18.0" | 6.5" | 36" | 45" |
| 30" | 7.5" | 22.0" | 8.6" | 58" | 63" |
| 36" | 7.5" | 25.0" | 8.6" | 58" | 63" |

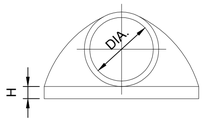


ELEVATION

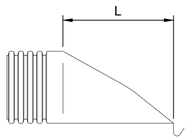


**END VIEW**

TYPICAL CROSS-SECTION

**NOTES:**

1. FLARED END SECTION SHALL BE HIGH DENSITY POLYETHYLENE MEETING ASTM D3350 MINIMUM CELL CLASSIFICATION 213320C.
2. METAL THREADED FASTENING ROD SHALL BE STAINLESS STEEL.
3. INSTALLATION SHALL BE IN ACCORDANCE WITH MANUFACTURERS INSTALLATION INSTRUCTIONS

**END SECTION FOR HDPE PIPE** — 1 / C104
NOT TO SCALE

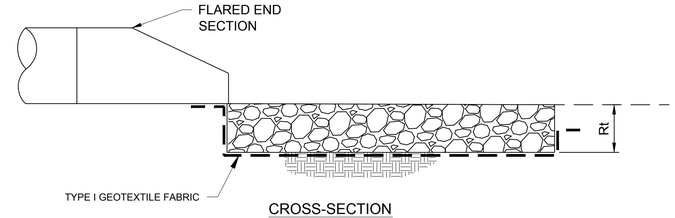


CROSS-SECTION

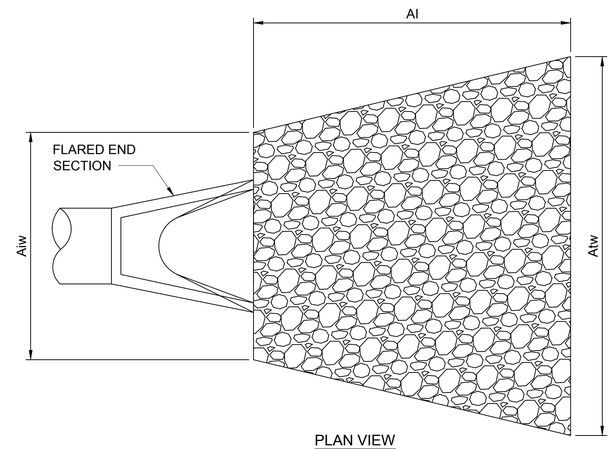


PLAN VIEW

**NOTES:**

1. THE SUBGRADE FOR GEOTEXTILE FABRIC AND RIP-RAP SHALL BE PREPARED TO THE LINES AND GRADES SHOWN.
2. THE ROCK USED FOR RIP-RAP SHALL CONFORM TO NHDOT CLASS C STONE.
3. GEOTEXTILE FABRICS SHALL BE PROTECTED FROM PUNCTURE OR TEARING DURING THE PLACEMENT OF THE ROCK RIP-RAP. DAMAGED AREAS IN THE FABRIC SHALL BE PREPARED BY PLACING A PIECE OF FABRIC OVER THE DAMAGED AREA OR BY COMPLETE REPLACEMENT OF THE FABRIC. ALL OVERLAPS REQUIRED FOR REPAIRS OR JOINING TWO PIECES OF FABRIC SHALL BE A MINIMUM OF 12 INCHES.
4. STONE FOR THE RIP-RAP MAY BE PLACED BY EQUIPMENT AND SHALL BE CONSTRUCTED TO THE FULL LAYER THICKNESS IN ONE OPERATION AND IN SUCH A MANNER AS TO PREVENT SEGREGATION OF THE STONE SIZES.

| OUTLET NO. | PIPE DIA Pd (IN) | RIP RAP | | APRON | | |
|---|---|---|---|---|---|---|
| | | SIZE (D50) | THICK. Rt (IN) | LENGTH Al (FT) | INITIAL WIDTH Aiw (FT) | TERMINAL WIDTH Atw (FT) |
| A | 15 | 6 | 18 | 15 | 3.5 | 19 |
| C | 15 | 6 | 18 | 9 | 3.5 | 13 |

**OUTLET PROTECTION** — 2 / C104
NOT TO SCALE

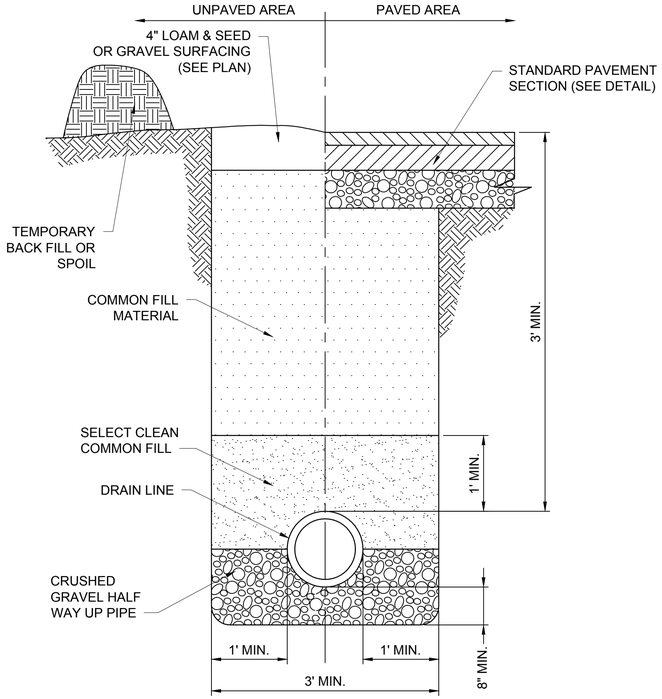


**PIPE TRENCH** — 3 / C506
NOT TO SCALE

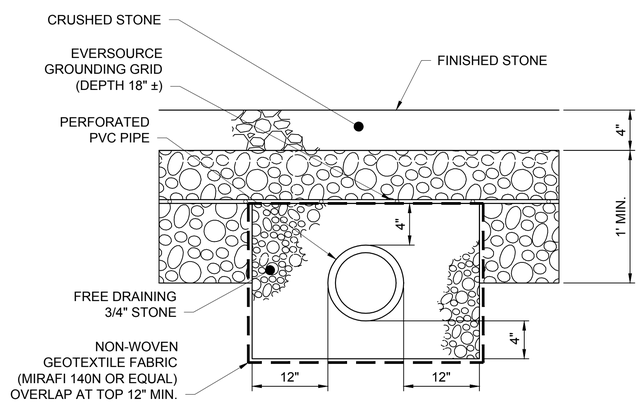


**UNDERDRAIN** — 4 / C104
NOT TO SCALE

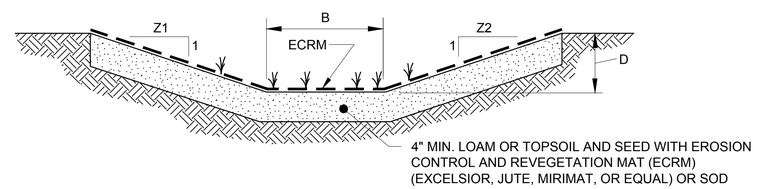


NOTES
1. CHANNEL DIMENSIONS ARE FOR THE COMPLETED CHANNEL FINISH SURFACE GRADE.
2. INSTALL EROSION CONTROL BLANKET LINING TO TOP OF CHANNEL.
3. INSTALL LINING PER MANUFACTURES SPECIFICATIONS AND RECOMMENDATIONS. SEED SLOPES PRIOR TO INSTALLATION PER MANUFACTURER RECOMMENDATIONS.
4. VEGETATED CHANNELS SHALL BE CONSTRUCTED FREE OF ROCKS, TREE ROOTS, STUMPS OR OTHER PROJECTIONS THAT WILL IMPEDE NORMAL CHANNEL FLOW AND/OR PREVENT GOOD LINING TO SOIL CONTACT. THE CHANNEL SHALL BE INITIALLY OVER-EXCAVATED TO ALLOW FOR THE PLACEMENT OF TOPSOIL.
5. ALL CHANNELS MUST BE KEPT FREE OF OBSTRUCTIONS SUCH AS FILL GROUND, FALLEN LEAVES AND WOODY DEBRIS, ACCUMULATED SEDIMENT, AND CONSTRUCTION MATERIALS/WASTES. CHANNELS SHOULD BE KEPT MOWED AND/OR FREE OF ALL WEEDY, BRUSHY OR WOODY GROWTH. ANY UNDERGROUND UTILITIES RUNNING ACROSS/THROUGH THE CHANNEL(S) SHALL BE IMMEDIATELY BACKFILLED AND THE CHANNEL(S) REPAIRED AND STABILIZED PER THE CHANNEL CROSS-SECTION DETAIL. DAMAGED LINING SHALL BE REPAIRED OR REPLACED WITHIN 48 HOURS OF DISCOVERY.

| CHANNEL | LENGTH (FT.) | B | D | SIDE SLOPE | | LINING | STAPLE PATTERN | SLOPE (%) |
|---|---|---|---|---|---|---|---|---|
| | | | | Z1 | Z2 | | | |
| A | 238' | 2' | 2.0' | 9 | 3 | ECRM | - | 0.5 |
| B | 78' | 0' | 2.0' | 12 | 100 | ECRM | - | 0.5 |
| C | 140' | 0' | 2.0' | 10 | 3 | ECRM | - | 0.46 |
| D | 183' | 0' | 1.7' | 20 | 3 | ECRM | - | 0.31 |
| E | 100' | 0' | 2.0' | 10 | 3 | ECRM | - | 2.12 |

**GRASS SWALE CROSS SECTION** — 5 / C101 C104
NOT TO SCALE


This document has been digitally sealed.
Oct 5 2015

**FOR PERMITTING PURPOSES ONLY**
**NOT FOR CONSTRUCTION**

| NO. | REVISION | DATE | DRWN | CHKD | APPRV |
|---|---|---|---|---|---|
| 1 | ISSUED FOR PERMITTING | 10/1/15 | JJS | RLR | BSS |

THE NORTHERN PASS
Transmission Business

TRANSITION STATION #6 CONSTRUCTION DETAILS

DATE: 10/1/2015
SCALE: NTS

DES: JJS | CHK: RLR
DRW: JJS | APR: BSS
TOWN: BRIDGEWATER, NH
TRANSMISSION LINE:
MILE NO:
SHEET 16 OF 20
NPTT916-C506
REVISION: XXX

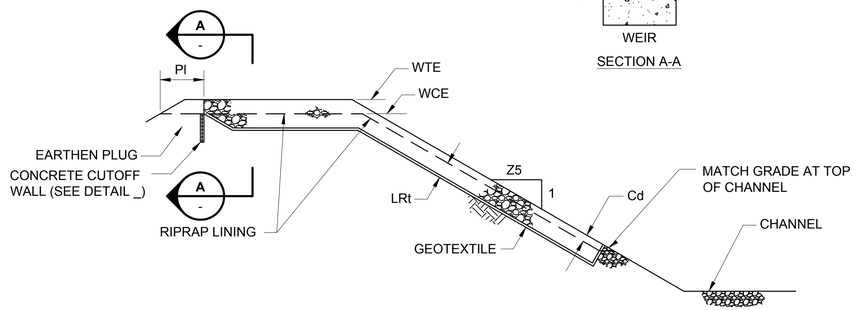


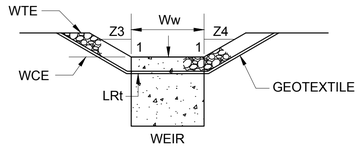


SECTION A-A

| BASIN | WEIR | | | | | | LINING | | CHANNEL | |
|---|---|---|---|---|---|---|---|---|---|---|
| | Z3 (FT) | Z4 (FT) | TOP ELEV WTE (FT) | CREST ELEV WCE (FT) | WIDTH Ww (FT) | PI (FT) | RIPRAP SIZE (R-_) | RIPRAP THICK. LRt (IN) | Z5 (FT) | DEPTH Cd (FT) |
| NORTH | 3 | 3 | 488.00 | 487.00 | 2 | 5 | 12 | 36 | 3 | 0' |
| SOUTH | 3 | 3 | 484.15 | 483.15 | 2 | 5 | 12 | 36 | 3 | 0' |

**SECTION THROUGH SPILLWAY** 1 / C104

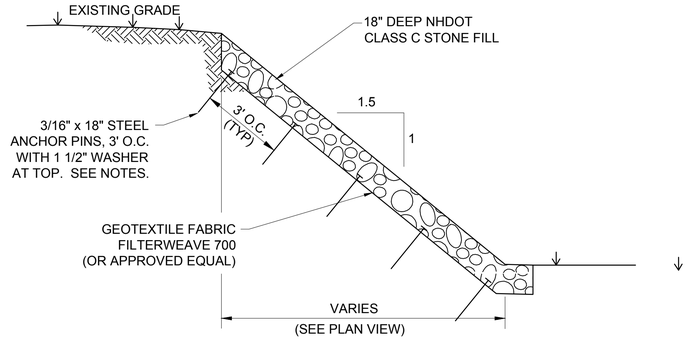


**NOTES:**

1. GEOTEXTILE PLACEMENT: THE GEOTEXTILE SHALL BE PLACED ON A SMOOTH GRADED SURFACE APPROVED BY THE ENGINEER. THE GEOTEXTILE SHALL BE PLACED IN SUCH A MANNER THAT IT WILL NOT EXCESSIVELY STRETCH OR TEAR UPON PLACEMENT OF THE OVERLYING MATERIALS. CARE SHOULD BE TAKEN TO PLACE THE GEOTEXTILE IN INTIMATE CONTACT WITH THE SOIL SUCH THAT NO VOID SPACES EXIST BETWEEN THE UNDERLYING SOIL AND THE GEOTEXTILE. ANCHORING OF THE GEOTEXTILE SHALL BE ACCOMPLISHED THROUGH THE USE OF KEY TRENCHES OR APRONS AT THE CREST AND TOE OF SLOPE.

2. GEOTEXTILE SHEETS SHALL BE JOINED BY EITHER SEWING OR OVERLAPPING. ALL OVERLAPS AND SEAMS SHALL BE SUBJECT TO THE APPROVAL OF THE ENGINEER. OVERLAPPED SHEETS SHALL HAVE A MINIMUM OVERLAP OF 18 IN. EXCEPT WHERE PLACED UNDERWATER WHERE THE OVERLAP SHALL BE A MINIMUM OF 3 FT. OVERLAPS SHALL BE CONSTRUCTED WITH THE UPSTREAM SHEET PLACED OVER THE DOWNSTREAM SHEET OR THE UPSLOPE SHEET PLACED OVER THE DOWNSLOPE SHEET. ALL OVERLAPS SHALL BE PINNED ON 3 FT. CENTERS TO HOLD THE OVERLAP IN PLACE DURING STONE PLACEMENT. PINS ARE RECOMMENDED TO BE 3/16 IN. DIAMETER, 18 IN. LONG STEEL PINS POINTED AT ONE END, AND FITTED WITH A 1.5 IN. DIAMETER WASHER AT THE OTHER.

3. CARE SHALL BE TAKEN TO AVOID CONTAMINATION OF THE GEOTEXTILE DURING CONSTRUCTION. CONTAMINATED GEOTEXTILE SHALL BE REMOVED AND REPLACED AT THE CONTRACTOR'S EXPENSE. DAMAGED GEOTEXTILE SHALL BE REMOVED OR REPAIRED AS DIRECTED BY THE ENGINEER AT NO COST TO THE OWNER A GEOTEXTILE PATCH MAY BE PLACED OVER DAMAGED AREAS IF APPROVED BY THE ENGINEER. THE PATCH SHALL EXTEND 3 FT. BEYOND THE PERIMETER OF THE TEAR OR DAMAGE.

4. GRAVEL AND RIP RAP: GRAVEL AND RIP RAP PLACEMENT SHALL BEGIN AT THE TOE AND PROCEED UP THE SLOPE. RIP RAP SHALL NOT BE DROPPED ONTO THE GEOTEXTILE FROM A HEIGHT OF MORE THAN 1 FT. GRAVEL SHALL NOT BE DROPPED ONTO THE GEOTEXTILE FROM A HEIGHT EXCEEDING 3 FT. ANY GEOTEXTILE DAMAGED DURING PLACEMENT OF RIP RAP OR GRAVEL SHALL BE REPLACED AS DIRECTED BY THE ENGINEER AT THE CONTRACTOR'S EXPENSE. IN UNDERWATER APPLICATIONS, THE GEOTEXTILE AND REQUIRED THICKNESS OF RIP RAP SHALL BE PLACED THE SAME DAY.

**SLOPE DETAIL** 2 / C100 C101
NOT TO SCALE

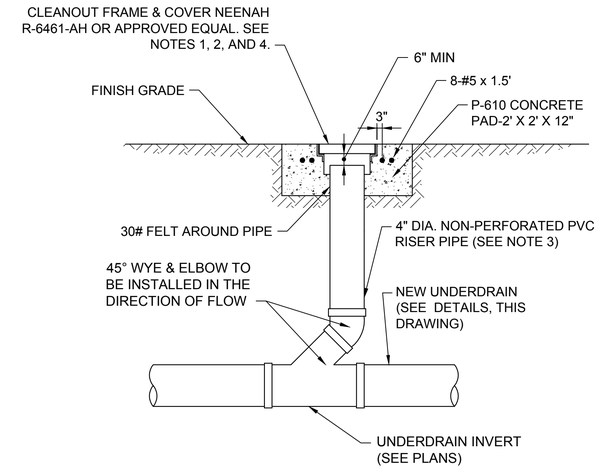


NOTES:

1. CLEANOUT FRAME AND COVER SHALL BE DUCTILE IRON DESIGNED TO HS-20 LOADINGS.

2. NO LOAD SHALL BE TRANSFERRED FROM CLEANOUT FRAME AND COVER TO 4" PVC UNDERDRAIN CLEANOUT OR COLLECTION STRUCTURE.

3. STANDARD MANUFACTURER FITTINGS SHALL BE USED TO CONNECT VERTICAL UNDERDRAINS TO PVC UNDERDRAINS AND OUTLET PIPES.

4. ALL UNDERDRAIN CLEANOUT AND COLLECTION STRUCTURE COVERS SHALL BE BOLT DOWN TYPE.

5. INVERTS FROM OPPOSITE DIRECTIONS MAY NOT BE AT THE SAME ELEVATIONS AS SHOWN IN DETAIL REFER TO THE PLANS FOR INVERT ELEVATIONS.

**UNDERDRAIN CLEANOUT** 3 / C104
NOT TO SCALE

NOT TO SCALE

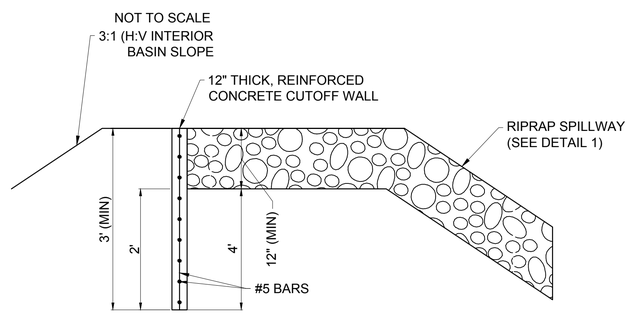


SECTION B-B

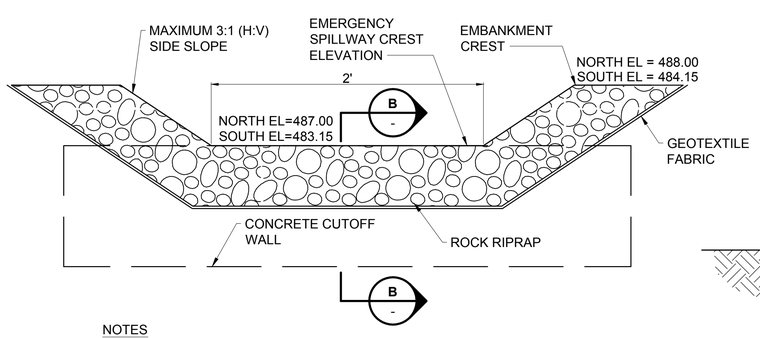


NOTES
1. SEE SECTION THROUGH SPILLWAY DETAIL 1 FOR FURTHER INFORMATION.

**SPILLWAY APRON** 4 / C104
NOT TO SCALE

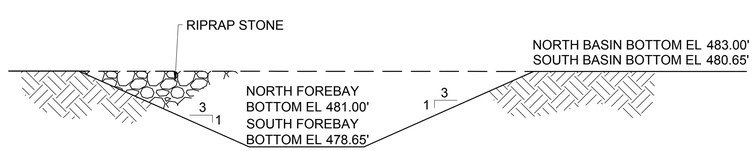


**SEDIMENT FOREBAY DETAIL** 5 / C104
NOT TO SCALE

This document has been digitally sealed.
Oct 5 2015

**FOR PERMITTING PURPOSES ONLY**
**NOT FOR CONSTRUCTION**

| NO. | REVISION | DATE | DRWN | CHKD | APPRV |
|---|---|---|---|---|---|
| 1 | ISSUED FOR PERMITTING | 10/1/15 | JJS | RLR | BSS |

THE NORTHERN PASS
Transmission Business

TRANSITION STATION #6
CONSTRUCTION DETAILS

DATE: 10/1/2015
SCALE: NTS

DES: JJS | CHK: RLR
DRW: JJS | APR: BSS

TOWN: BRIDGEWATER, NH
TRANSMISSION LINE:
MILE NO:
SHEET 17 OF 20
NPTT917-C507

REVISION: XXX

Z:\CLIENTS\TND\NUSC\58466_NPT\DESIGN\SUBSTATION\900-TRANSITION_STATION-6\CADD\NPTT917-C507.DWG 10/5/2015 8:53 AM BSAKIDOVITCH

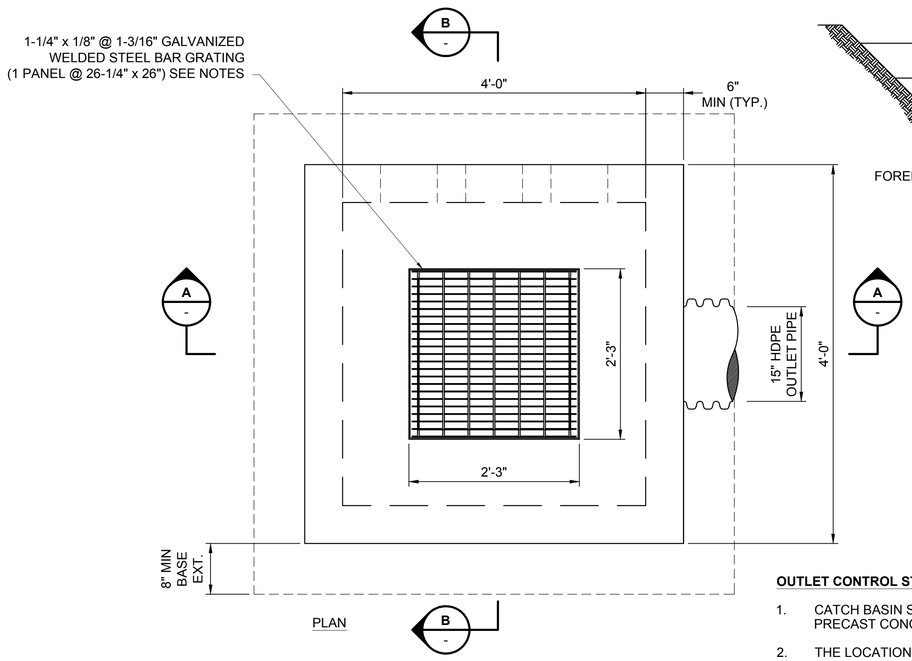


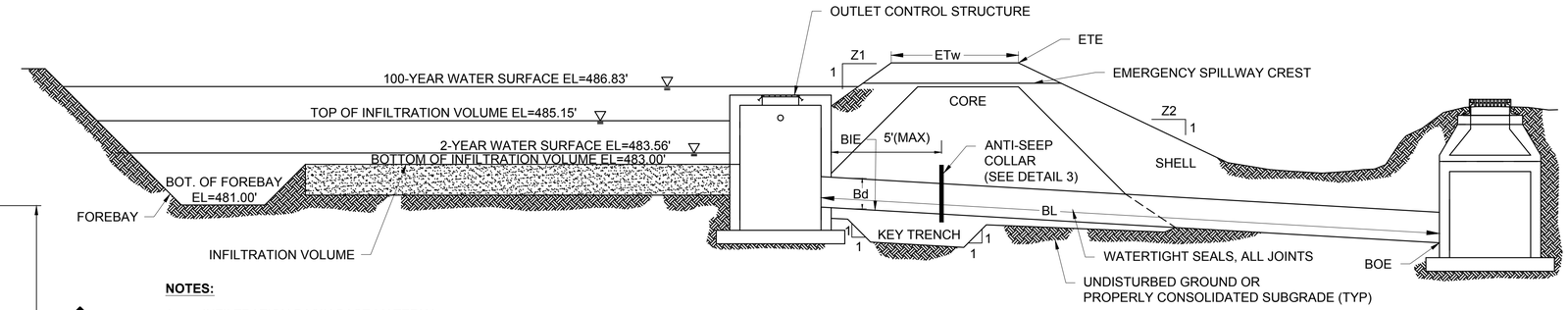


**NOTES:**

1. INFILTRATION BASIN BASE MATERIAL SHALL BE A 6" LAYER CONSISTING OF COARSE SAND OR 3/8" PEA GRAVEL.
2. AFTER THE BASIN IS EXCAVATED TO THE FINAL DESIGN ELEVATION, THE FLOOR SHALL BE DEEPLY TILLED WITH A ROTARY TILLER OR DISC HARROW TO RESTORE INFILTRATION RATES, FOLLOWED BY A PASS WITH A LEVELING DRAG.
3. ABSOLUTELY NO RUNOFF IS TO ENTER INFILTRATION BASIN UNTIL ALL CONTRIBUTING DRAINAGE AREAS HAVE BEEN STABILIZED. SURFACE OF BASIN SHALL BE LEVEL.

| BASIN | Z1 (FT) | Z2 (FT) | BARREL | | | | | EMBANKMENT | | |
|---|---|---|---|---|---|---|---|---|---|---|
| | | | DIA Bd (IN) | INLET ELEV BIE (FT) | MAT'L | LENGTH BL (FT) | OUTLET ELEV BOE (FT) | TOP ELEV ETE (FT) | TOP WIDTH ETw (FT) | CREST (FT) |
| NORTH | 3 | 3 | 15 | 480.75 | HDPE | 210' | 479.70 | 488.00 | 6 | 487.00 |

**NORTH INFILTRATION BASIN CROSS SECTION** — 1 / C104
NOT TO SCALE

**OUTLET CONTROL STRUCTURE NOTES:**

1. CATCH BASIN STRUCTURE IS TO BE PRECAST CONCRETE.
2. THE LOCATION AND ELEVATION INDICATED ON NPTT907-C104 ARE AT THE TOP CENTER OF THE GRATE. THE ORIFICE HOLES SHOULD BE PLACED AT THE ELEVATIONS AS SHOWN ON THE PLANS AND DETAILS.
3. GRATING SHALL BE AMICO STANDARD WELDED TYPE "W" 19W4 RESISTANCE WELDED GRATING AS MANUFACTURED BY ALABAMA METAL INDUSTRIES CORP. OR ENGINEERING APPROVED EQUAL.

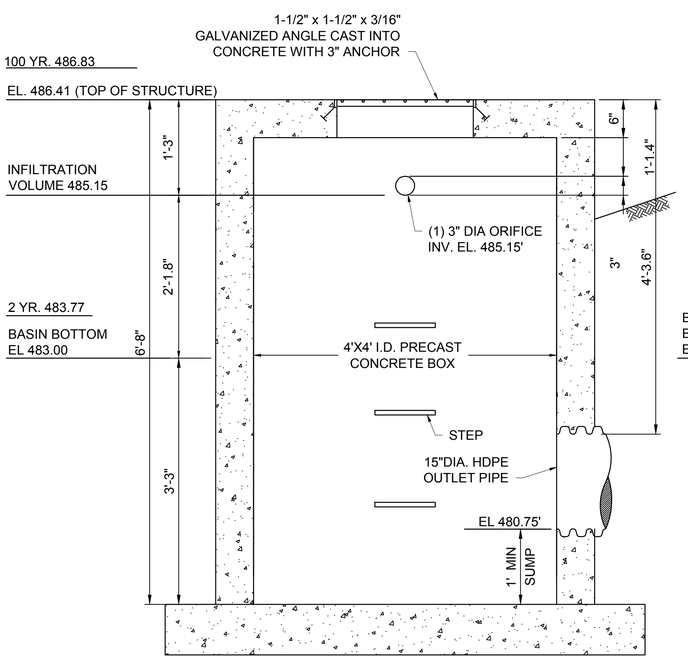


SECTION A-A

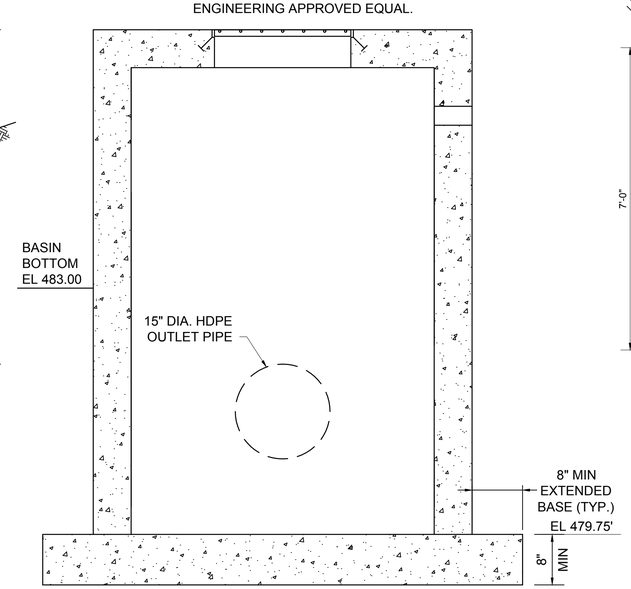


SECTION B-B

**NORTH OUTLET CONTROL STRUCTURE** — 2 / C104
NOT TO SCALE

**NOTES:**

1. WRAP PIPE WITH "RAM-NEK" OR EQUIVALENT WHERE PIPE IS EXPOSED TO CONCRETE PRIOR TO POURING.
2. EXCAVATION & BACKFILL SHALL BE AS SPECIFIED.
3. DO NOT PLACE WITHIN 2 FEET OF A PIPE JOINT.
4. REFER TO DETAIL 1 FOR LOCATION.

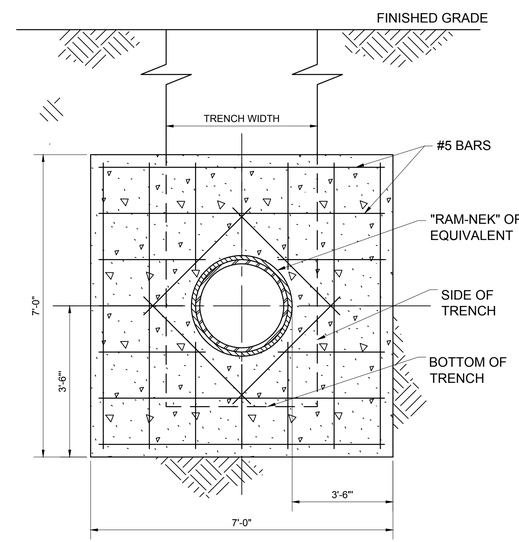


SECTION A-A

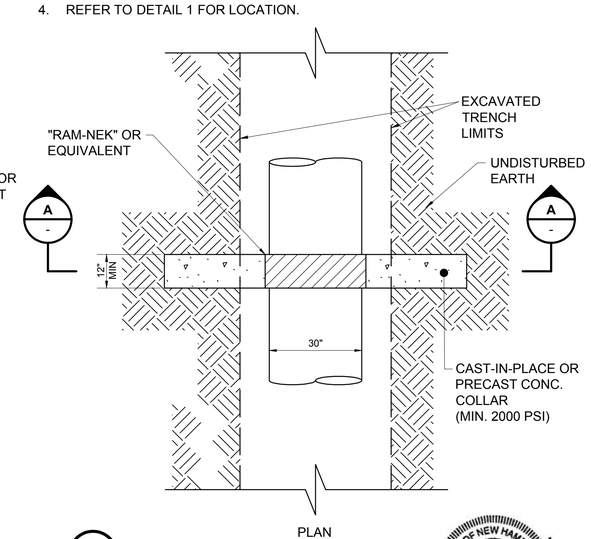


**ANTI SEEP COLLAR** — 3 / C508, C509
NOT TO SCALE

STATE OF NEW HAMPSHIRE — BRIAN J. SAKIDOVITCH No. 14328 — LICENSED PROFESSIONAL ENGINEER

This document has been digitally sealed.
Oct 5 2015

**FOR PERMITTING PURPOSES ONLY**
**NOT FOR CONSTRUCTION**

| NO. | REVISION | DATE | DRWN | CHKD | APPRV. |
|---|---|---|---|---|---|
| 1 | ISSUED FOR PERMITTING | 10/1/15 | JJS | RLR | BSS |

THE NORTHERN PASS
Transmission Business

TRANSITION STATION #6
CONSTRUCTION DETAILS

DATE: 10/1/2015
SCALE: NTS

DES: JJS | CHK: RLR
DRW: JJS | APR: BSS
TOWN: BRIDGEWATER, NH
TRANSMISSION LINE:
MILE NO:
SHEET 18 OF 20
NPTT918-C508
REVISION: XXX

Z:\CLIENTS\TND\NUSC\58466_NPT\DESIGN\SUBSTATION\900-TRANSITION_STATION-6\CADD\NPTT918-C508.DWG 10/5/2015 8:33 AM BSAKIDOVITCH

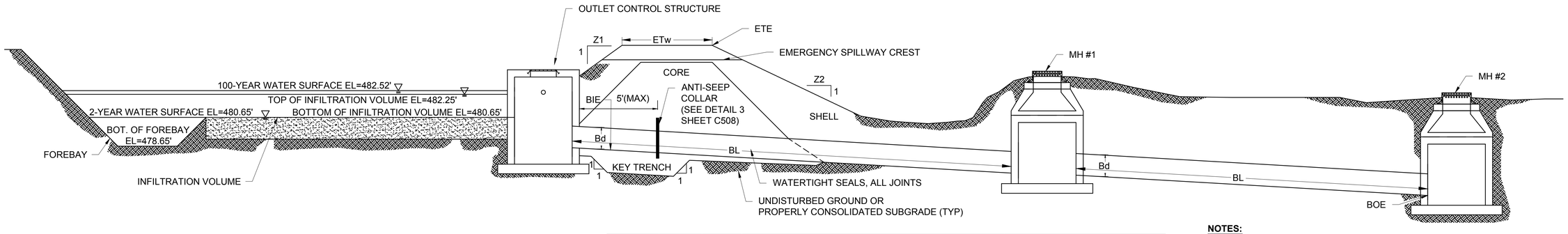


| BASIN | Z1 (FT) | Z2 (FT) | BARREL | | | | | EMBANKMENT | | |
|---|---|---|---|---|---|---|---|---|---|---|
| | | | DIA Bd (IN) | INLET ELEV BIE (FT) | MAT'L | LENGTH BL (FT) | OUTLET ELEV BOE (FT) | TOP ELEV ETE (FT) | TOP WIDTH ETw (FT) | CREST (FT) |
| SOUTH | 3 | 3 | 12 | 480.58 | HDPE | 82' + 224' | 479.70 | 484.15 | 6 | 483.15 |

**SOUTH INFILTRATION BASIN CROSS SECTION** — 1 / C104

NOT TO SCALE

**NOTES:**

1. INFILTRATION BASIN BASE MATERIAL SHALL BE A 6" LAYER CONSISTING OF COARSE SAND OR 3/8" PEA GRAVEL.
2. AFTER THE BASIN IS EXCAVATED TO THE FINAL DESIGN ELEVATION, THE FLOOR SHALL BE DEEPLY TILLED WITH A ROTARY TILLER OR DISC HARROW TO RESTORE INFILTRATION RATES, FOLLOWED BY A PASS WITH A LEVELING DRAG.
3. ABSOLUTELY NO RUNOFF IS TO ENTER INFILTRATION BASIN UNTIL ALL CONTRIBUTING DRAINAGE AREAS HAVE BEEN STABILIZED. SURFACE OF BASIN SHALL BE LEVEL.

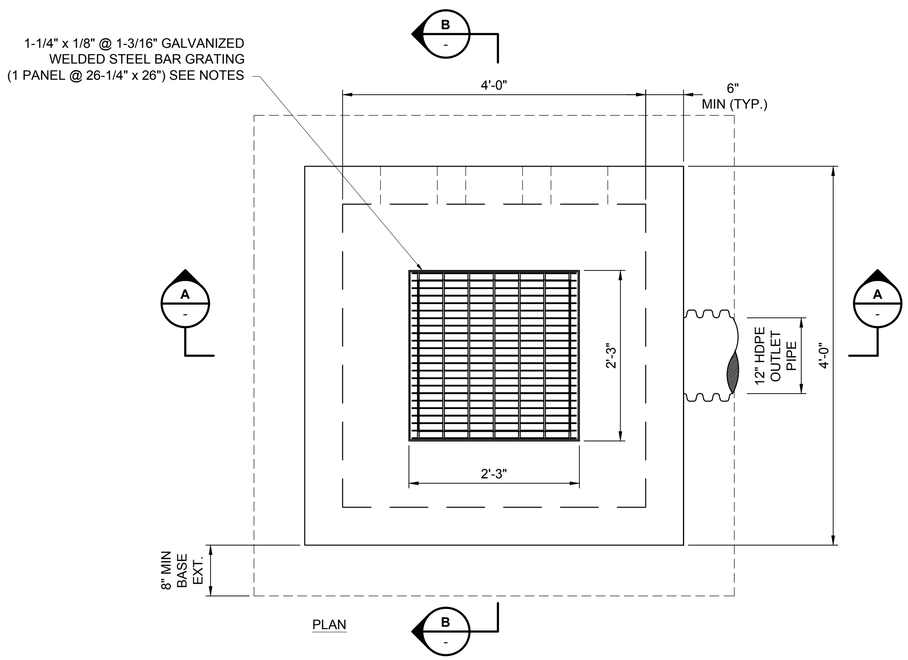


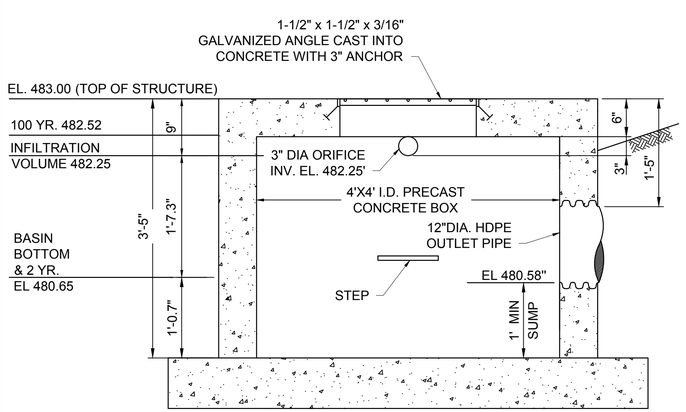


SECTION A-A

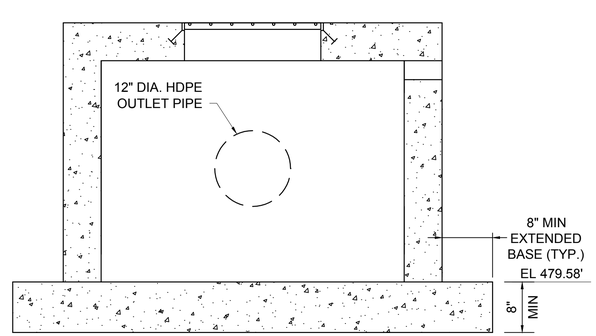


SECTION B-B

**SOUTH OUTLET CONTROL STRUCTURE** — 2 / C104

NOT TO SCALE

**OUTLET CONTROL STRUCTURE NOTES:**

1. CATCH BASIN STRUCTURE IS TO BE PRECAST CONCRETE.
2. THE LOCATION AND ELEVATION INDICATED ON NPTT907-C104 ARE AT THE TOP CENTER OF THE GRATE. THE ORIFICE HOLES SHOULD BE PLACED AT THE ELEVATIONS AS SHOWN ON THE PLANS AND DETAILS.
3. GRATING SHALL BE AMICO STANDARD WELDED TYPE "W" 19W4 RESISTANCE WELDED GRATING AS MANUFACTURED BY ALABAMA METAL INDUSTRIES CORP. OR ENGINEERING APPROVED EQUAL.


This document has been digitally sealed. Oct 5 2015

**FOR PERMITTING PURPOSES ONLY NOT FOR CONSTRUCTION**

| NO. | REVISION | DATE | DRWN | CHKD | APPRV. |
|---|---|---|---|---|---|
| 1 | ISSUED FOR PERMITTING | 10/1/15 | JJS | RLR | BSS |

THE NORTHERN PASS

Transmission Business

TRANSITION STATION #6 CONSTRUCTION DETAILS

DATE: 10/1/2015

SCALE: NTS

DES: JJS | CHK: RLR
DRW: JJS | APR: BSS

TOWN: BRIDGEWATER, NH

TRANSMISSION LINE:

MILE NO:

SHEET 19 OF 20

NPTT919-C509

REVISION: XXX

Z:\CLIENTS\TND\NUSC\58466_NPT\DESIGN\SUBSTATION\900-TRANSITION_STATION-6\CADD\NPTT919-C509.DWG 10/5/2015 8:35 AM BSAKIDOVITCH

**NOTES:**

1. GATE ASSEMBLY AS MFG. BY JOHN BROWN & SONS, WEARE, NH 603-529-7975 OR APPROVED EQUAL.
2. ENTIRE GATE ASSEMBLY SHALL BE PRIMED & TOP COATED FOREST GREEN AFTER FABRICATION.

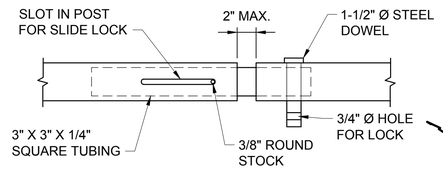


**SLIDE LOCK DETAIL**

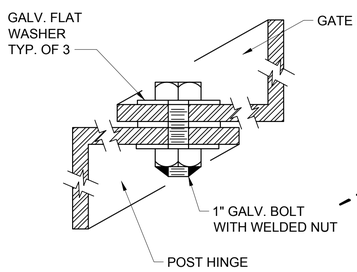


**HINGE BOLT DETAIL**

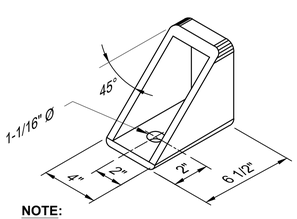


**NOTE:**
CUT FROM 4" x 6" x 1/2" RECT. TUBING

**HINGES**

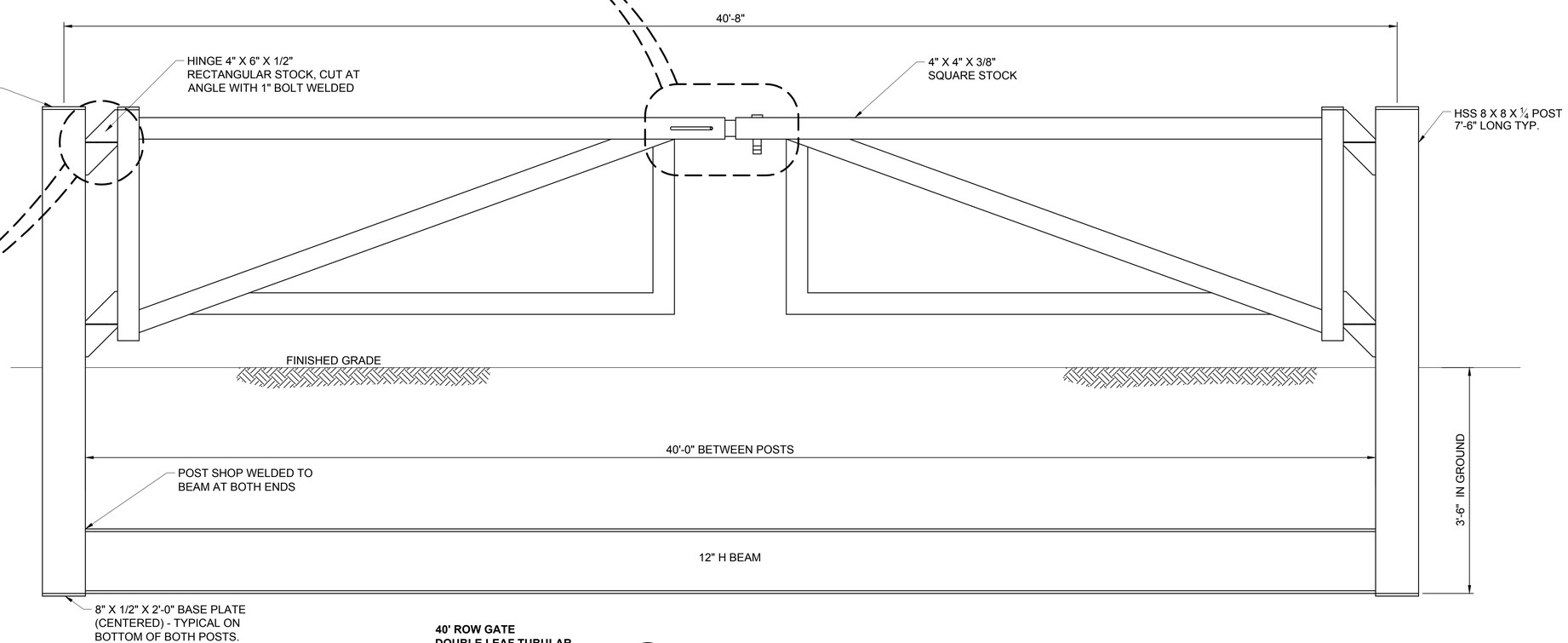


**40' ROW GATE**
**DOUBLE LEAF TUBULAR**
**WITH BURIED CROSS BEAM** — 1 / C100

NOT TO SCALE


This document has been digitally sealed.
Oct 5 2015

**FOR PERMITTING PURPOSES ONLY**
**NOT FOR CONSTRUCTION**

| NO. | REVISION | DATE | DRWN | CHKD | APPRV. |
|---|---|---|---|---|---|
| 1 | ISSUED FOR PERMITTING | 10/1/15 | JJS | RLR | BSS |

THE NORTHERN PASS

Transmission Business

#

TRANSITION STATION #6
CONSTRUCTION DETAILS

DATE: 10/1/2015

SCALE: NTS

DES: JJS | CHK: RLR
DRW: JJS | APR: BSS

TOWN: BRIDGEWATER, NH

TRANSMISSION LINE:

MILE NO:

SHEET 20 OF 20

NPTT919-C510

REVISION: XXX

Z:\CLIENTS\TND\NUSC\58466_NPT\DESIGN\SUBSTATION\900-TRANSITION_STATION-6\CADD\NPTT920-C510.DWG 10/5/2015 8:35 AM BSAKIDOVITCH